# Lincoln Quicklub centralized and automatic lubrication systems

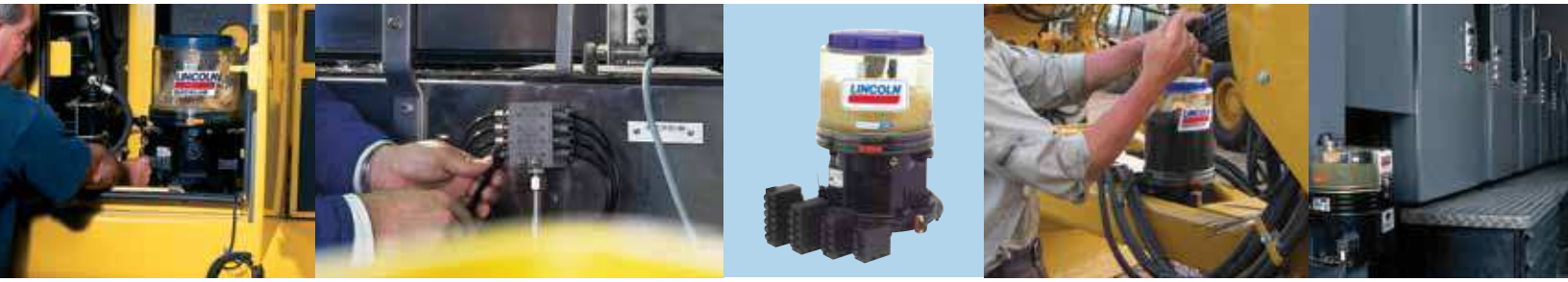

# People, capabilities and systems to save money and increase productivity

We're the largest and most successful company in our field because we continually satisfy our customers with the world's best lubrication and pumping systems. For more than a century, companies have relied on our technical and quality leadership, our world-class manufacturing and customer service, and our vast network of distributors and support facilities.

Lincoln develops new products and systems at research and development facilities in the U.S., Germany and India that provide global and regional application solutions.

We have solutions for large processing plants, automotive manufacturing, pulp and paper mills, and food and beverage facilities. Virtually every industrial professional involved in operations and maintenance can benefit from Lincoln systems.

On the road or in the field, Lincoln protects heavy equipment used in mining, construction, agriculture and over-the-road trucking. The world's leading manufacturers offer our systems as standard equipment or factory options.

Lincoln builds precision metal components, state-of-the-art electronic controls, and the industry's top-performing pump systems. Our quality systems in the United States and Germany are ISO 9001 registered.

With five technical support centers on three continents, and a network of systems houses and distributors supported by regional sales and service offices, our customers can always draw on our worldwide resources.

To make sure your investment results in significant savings, Lincoln developed a unique program called BearingSaver. You not only get a complete audit of your facility, you also receive an analysis of your return on investment.

LINCOLN

SKF

*Introduction to Quicklub* . . . . . 2

*SSV Divider Valves* . . . . . 4

*SSVM Divider Valves* . . . . . 5

*SSV-D Divider Valves* . . . . . 6
*with Outlets 1 and 2 Together* . . . . . 7

*Electric Grease Pumps* . . . . . 8
*203 Series* . . . . . 8
*233 Series* . . . . . 13
*Reservoir Field Upgrades* . . . . . 14
*QLS 401 Series* . . . . . 15
*QLS 301 Series* . . . . . 18
*QLS 311 Series* . . . . . 19
*QLS 421 Series* . . . . . 21
*Hammer* . . . . . 22

*Pump Accessories* . . . . . 24

*Installation Components* . . . . . 25

*Fittings, Adapters and Accessories* . . . . . 26

*Single Point Lubrication Kits* . . . . . 32

*Numerical Index* . . . . . 35

The Lincoln Quicklub system is designed to provide a relatively simple and inexpensive method of centralizing or automating the lubrication of machinery bearings.

Quicklub can be a simple, centralized system with lubricant supplied manually from a lever gun. Pre-assembled kits are available to service up to 12 points from a single grease fitting. Custom kits can also be provided by our distributors to cover virtually any quantity of points desired.

**Quicklub® lubrication method**
A Quicklub® centralized lubrication system typically dispenses measured amounts of lubricant to each point covered by the system. Even those hard to reach are assured of being properly lubricated and purged of contaminants.

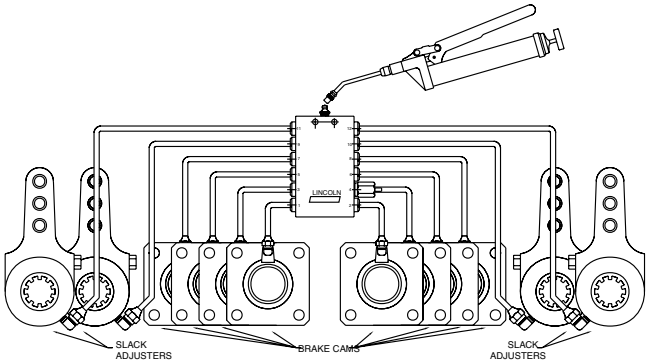


**System Operation**

1. The lubricant is delivered to the divider valves through a hand- or air-operated grease gun.
2. The divider valve dispenses lubricant in measured amounts directly to each point being covered by the system through the feedlines. Visual indication of cycle pin assures that all points are lubricated.

Quicklub can also be a fully automated system with lubricant supplied by our 12VDC and 24VDC electric or pneumatic pumps. An automated lubrication system typically dispenses small measured amounts of lubricant at frequent intervals while production machines are operating. The electric pumps incorporate an integrated timer for easy installation and trouble-free operation.

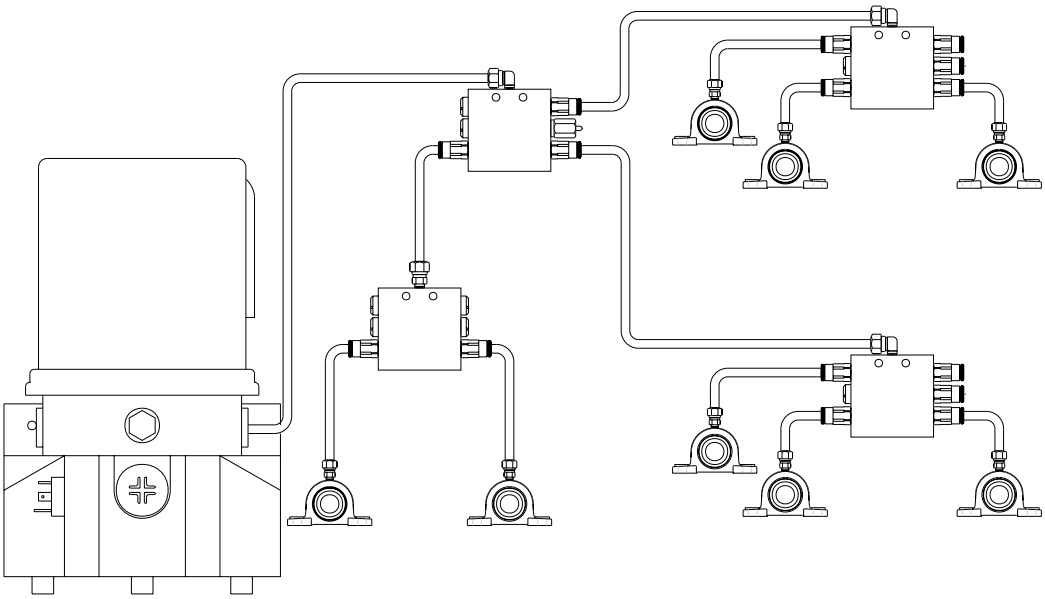

Quicklub systems have proven to be the right solution for many industries and applications, eliminating costly, manual point-by-point lubrication. Examples include:

**Mobile Equipment**

- Over-the-road tractors
- Single-axle trailers
- Tandem-axle trailers
- Tri-axle trailers
- Yard tractors
- Trucks of all types
- Refuse haulers
- Wheel loaders
- Hydraulic excavators
- Motor graders
- Backhoe loaders
- Hydraulic hammers
- Street sweepers
- Road & highway paving equipment

**Industrial Equipment**

- Packaging
- Lathes
- Beverage industry
- Textile
- Metal working
- Wood processing
- Material handling equipment
- Bakery
- Printing
- Punch presses
- Paper converting
- Milling
- Plastic processing
- Wind energy

# The heart of the Quicklub® system

More than a drilled manifold block, the valve incorporates a series of metering pistons which accurately dispense lubricant from each outlet, overcoming back pressure of up to 1,000 psi. Visual monitoring is provided with an indicator pin, which confirms a valve has completed a full cycle. Quicklub divider valves are available for grease or oil applications and in carbon steel and 303 stainless steel for corrosive environments.

**Figure 1**

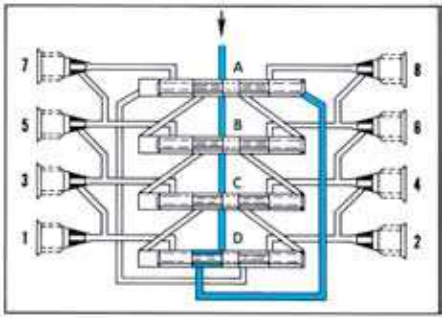


**Figure 2**

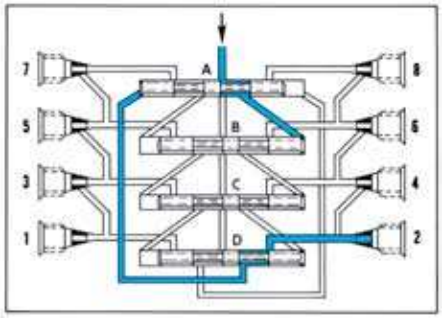


**Figure 3**

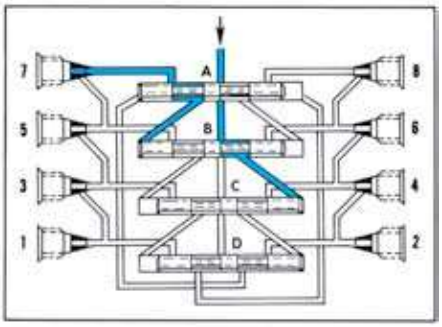


**Figure 4**

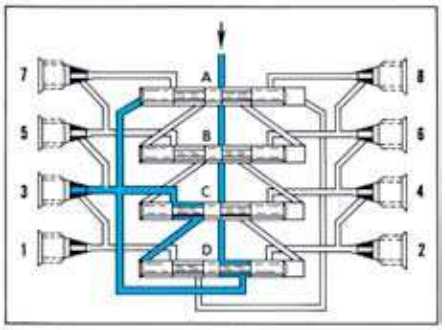


The inlet passageway is connected to all piston chambers at all times with only one piston free to move at any time.

- With all pistons at the far right, lubricant from the inlet flows against the right end of piston A (fig. 1).
- Lubricant flow shifts piston A from right to left, dispensing lubricant through connecting passages to outlet 2. Flow is then directed against the right side of piston B (fig. 2).
- Piston B shifts from right to left, dispensing lubricant through outlet 7. Lubricant flow is directed against the right side of piston C (fig. 3).
- Piston C shifts from right to left, dispensing lubricant through outlet 5. Lubricant flow is directed against the right side of piston D.
- Piston D shifts from right to left, dispensing through outlet 3. Piston D's shift directs lubricant through a connecting passage to the left side of piston A (fig. 4).

Lubricant flow against the left side of piston A begins the second half-cycle, which shifts pistons from left to right, dispensing lubricant through outlets 1,8,6 and 4 of the divider valve.

**Crossporting a Divider Valve**

Outputs from adjacent outlets may be combined by installing a closure plug in one or more outlets. Lubricant from a plugged outlet is redirected to the next adjacent outlet in descending numerical order. Outlets 1 and 2 must not be plugged since they have no cross-port passage to the next adjacent outlet.

In figure 5, outlets 5 and 3 are cross-ported and directed through outlet 1. In this example, outlet 1 will dispense three times as much lubricant as outlet 7. The tube ferrules in outlets 1 and 7 block the cross-port passage so that lubricant flow is only directed through outlets.

**Figure 5**

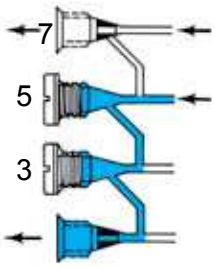

## SSV Divider Valves

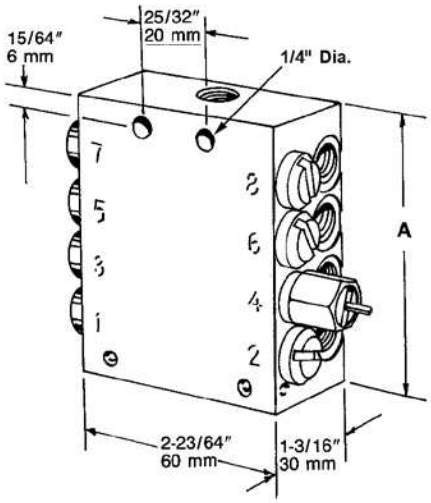


The SSV Divider Valve is the "heart" of a manual or automated Quicklub system. Featuring from six to 22 outlets, the SSV valve is available in carbon steel and 303 stainless steel for corrosive environments. Valves are available with cycle indicator pins to provide visual indication of system operation.

## Specifications:

| Construction Material | Max. Operating Pressure<br>Min. Operating Pressure | Output/Cycle per Outlet cu. in. / cc | Lubricant Inlet | Lubricant Outlet | Operating Temperature | |
|---|---|---|---|---|---|---|
| | | | | | Min. | Max. |
| Carbon Steel | 5076 psig / 350 bar<br>290 psig / 20 bar | .012 / .2 | ⅛" NPTF(F) | M10x1 | -22°F<br>(-30°C) | 212°F<br>(100°C) |
| Stainless Steel | | | ⅛" BSPP(F)* | | | |

**Note:** Lubricant outlet must use Lincoln Quicklub fittings. See Divider Valve Accessories section.
* 241650 stainless steel adapter available to convert inlet to ⅛" NPTF (F).

| Model No. | | Maximum Number of Outlets | Cycle Indicator Pin | Dimension A in. / mm |
|---|---|---|---|---|
| Carbon Steel | 303 Stainless Steel | | | |
| 619-27121-1 | | 6 | No | 2.36 / 60 |
| 619-27122-1 | 619-27472-1 | | Yes | |
| 619-26396-2 | | 8 | No | 2.95 / 75 |
| 619-26646-2 | 619-27474-1 | | Yes | |
| 619-26844-1 | | 10 | No | 3.54 / 90 |
| 619-26845-2 | 619-27476-1 | | Yes | |
| 619-26398-2 | | 12 | No | 4.14 / 105 |
| 619-26648-2 | 619-27478-1 | | Yes | |
| 619-29400-1 | | 14 | No | 4.8 / 120 |
| 619-28899-1 | 619-29067-1 | | Yes | |
| 619-29401-1 | | 16 | No | 5.4 / 135 |
| 619-28900-1 | | | Yes | |
| 619-28901-1 | | 18 | Yes | 5.9 / 150 |
| 619-28902-1 | | 20 | Yes | 6.5/165 |
| 619-77254-1 | | 22 | Yes | 7.1/180 |

**Note: You must use outlets 1 and 2 for each of the above referenced models to allow the system to operate properly.**

## SSV Divider Valve Accessories

| Model Number | Description |
|---|---|
| 249010 | Cycle switch for providing feedback monitoring for SSV systems - 11" cable / 26-gauge wire |

**Note:** Cycle switch can only be used with SSV Series Quicklub valves that have indicator pins. Remove slotted plug from indicator assembly on valve prior to installing switch.

## SSVM Divider Valves

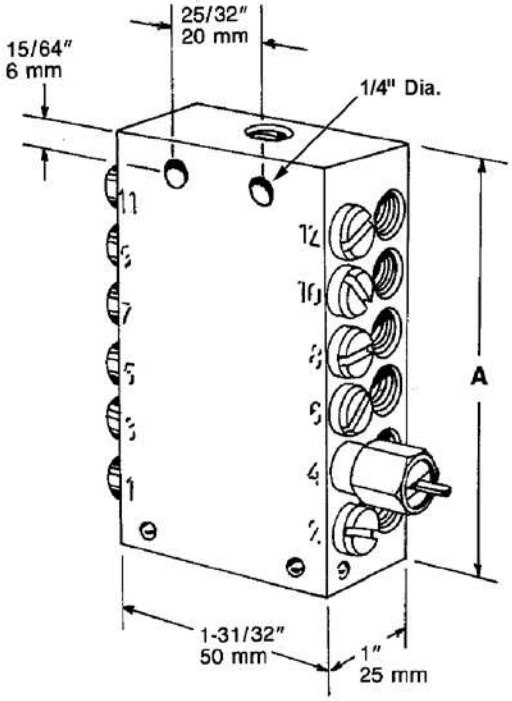


The SSVM Divider Valve is smaller in overall size than the SSV series and provides smaller volume output per outlet. Available with six to 12 outlets, the SSVM series valve is used primarily in oil system applications.

## Specifications:

| Construction Material | Maximum Operating Pressure | Output/Cycle per Outlet cu. in. / cc | Lubricant Inlet | Lubricant Outlet | | Operating Temperatur | |
|---|---|---|---|---|---|---|---|
| | | | | | | Min. | Max. |
| Carbon Steel | 2900 psig / 200 bar | .0037 / .07 | 1⁄8" NPTF(F) | M8x1 | | -22°F (-25°C) | 212°F (70° |

| Model No. | Maximum Number of Outlets | Cycle Indicator Pin | Dimension A in. / mm |
|---|---|---|---|
| Carbon Steel | | | |
| 619-26764-1 | 6 | No | 1.91 / 48.5 |
| 619-26765-3 | | Yes | |
| 619-26650-1 | 8 | No | 2.36 / 60 |
| 619-26651-3 | | Yes | |
| 619-26848-1 | 10 | No | 2.81 / 71.5 |
| 619-26849-2 | | Yes | |
| 619-26653-1 | 12 | No | 3.26 / 83 |
| 619-26654-3 | | Yes | |

**Note: You must use outlets 1 and 2 for each of the above referenced models to allow the system to operate properly.**

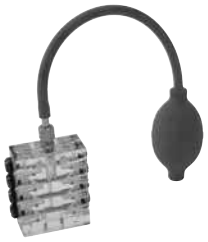

## Divider Valve Accessories

| Model Number | Description |
|---|---|
| 619-36732-1 | Demonstration Valve (see-through block) |
| 619-36732-2 | Cut-away model valve (SSV8) |

## SSV-D
## Metering Device

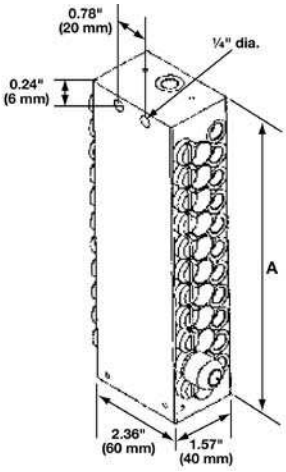


SSV-D metering devices are adjustable per outlet pair, thus enabling lubricant requirements to be better met. The metering occurs within the block via metering screws that are available in ten different outputs (sold separately).
The outputs of the progressive metering device can be easily set, even after installation. Simply put in a different size metering screw! Tedious reassembly of entire metering device segments is a thing of the past.
The SSV-D can be integrated into system using standard SSV metering devices. Both metering device types also use the same components such as piston detector and outlet closure plugs.

## Specifications:

| Construction Material | Max. Operating Pressure | Output/Outlet Pair/Stroke cu. in. / cc | Lubricant Inlet | Lubricant Outlet | Operating Temperature |
|---|---|---|---|---|---|
| Carbon Steel | 5076 psig / 350 bar | Min. .0049/.08 / Max. .110/1.8 | ⅛" NPTF(F) | M10x1 | -13°F to 158°F / (-25°C to 70°C) |

| Model No. | Maximum Number of Outlets | Cycle Indicator Pin | Dimension A in. / mm | Number of Required Metering Screws |
|---|---|---|---|---|
| 649-29535-1 | 6 | No | 2.75 / 70 | 3 |
| 649-29545-1 | | Yes | | |
| 649-29536-1 | 8 | No | 3.35 / 85 | 4 |
| 649-29546-1 | | Yes | | |
| 649-29537-1 | 10 | No | 3.94 / 100 | 5 |
| 649-29547-1 | | Yes | | |
| 649-29538-1 | 12 | No | 4.53 / 115 | 6 |
| 649-29548-1 | | Yes | | |
| 649-29539-1 | 14 | No | 5.12 / 130 | 7 |
| 649-29549-1 | | Yes | | |
| 649-29627-1 | 16 | No | 5.71 / 145 | 8 |
| 649-29635-1 | | Yes | | |
| 649-29628-1 | 18 | No | 6.3 / 160 | 9 |
| 649-29636-1 | | Yes | | |
| 649-29629-1 | 20 | No | 7.48 / 190 | 10 |
| 649-29637-1 | | Yes | | |
| 649-29630-1 | 22 | No | | 11 |
| 649-29638-1 | | Yes | | |

**Note: You must use outlets 1 & 2 for each of the above reference models to allow the system to operate properly.**

## Metering Adjustment Screws

| Output cu. in. / cc | Model Number | |
|---|---|---|
| | Sold as Each | Bag of 12 |
| .0049 / 0.08 | 303-16118-1 | 549-34254-1 |
| .0085 / 0.14 | 303-16119-1 | 549-34254-2 |
| .012 / 0.2 | 303-16120-1 | 549-34254-3 |
| .018 / 0.3 | 303-16121-1 | 549-34254-4 |
| .024 / 0.4 | 303-16122-1 | 549-34254-5 |

| Output cu. in. / cc | Model Number | |
|---|---|---|
| | Sold as Each | Bag of 12 |
| .037 / 0.6 | 303-16123-1 | 549-34254-6 |
| .049 / 0.8 | 303-16124-1 | 549-34254-7 |
| .061 / 1.0 | 303-16125-1 | 549-34254-8 |
| .085 / 1.4 | 303-16126-1 | 549-34254-9 |
| .110 / 1.8 | 303-16127-1 | 549-34255-1 |

# SSV-D Metering Device with Outlets 1 & 2 Together

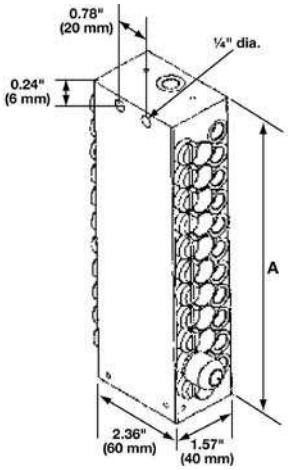


For added installation flexibility, outlets 1 and 2 can be singled together. In this configuration, outlets #1 and #2 are internally connected thus doubling the output through one output port. See the chart below for models and outlet configurations.

## Specifications:

| Construction Material | Max. Operating Pressure | Output/Outlet Pair/Stroke cu. in. / cc | Lubricant Inlet | Lubricant Outlet | Operating Temperature |
|---|---|---|---|---|---|
| Carbon Steel | 5076 psig / 350 bar | Min. .0049/.08 / Max. .110/1.8 | ⅛" NPTF(F) | M10x1 | -13°F to 158°F / (-25°C to 70°C) |

| Model No. | Description | Maximum Number of Outlets | Cycle Indicator Pin | Number of Required Metering Screws |
|---|---|---|---|---|
| 649-29540-1 | NPT SSVD 6/5-V1-A | 5 | No | 3 |
| 649-29550-1 | NPT SSVD 6/5-V1-K-A | | Yes | |
| 649-29541-1 | NPT SSVD 8/7-V1-A | 7 | No | 4 |
| 649-29551-1 | NPT SSVD 8/7-V1-K-A | | Yes | |
| 649-29542-1 | NPT SSVD 10/9-V1-A | 9 | No | 5 |
| 649-29552-1 | NPT SSVD 10/9-V1-K-A | | Yes | |
| 649-29543-1 | NPT SSVD 12/11-V1-A | 11 | No | 6 |
| 649-29553-1 | NPT SSVD 12/11-V1-K-A | | Yes | |
| 649-29544-1 | NPT SSVD 14/13-V1-A | 13 | No | 7 |
| 649-29554-1 | NPT SSVD 14/13-V1-K-A | | Yes | |
| 649-29631-1 | NPT SSVD 16/15-V1-A | 15 | No | 8 |
| 649-29639-1 | NPT SSVD 16/15-V1-K-A | | Yes | |
| 649-29632-1 | NPT SSVD 18/17-V1-A | 18 | No | 9 |
| 649-29640-1 | NPT SSVD 18/17-V1-K-A | | Yes | |
| 649-29633-1 | NPT SSVD 20/19-V1-A | 19 | No | 10 |
| 649-29641-1 | NPT SSVD 20/19-V1-K-A | | Yes | |
| 649-29634-1 | NPT SSVD 22/21-V1-A | 21 | No | 11 |
| 649-29642-1 | NPT SSVD 22/21-V1-K-A | | Yes | |

**Note: A plug must be installed in outlets 1 or 2 but not both for the above referenced models to allow the system to operate properly. One metering screw needed per outlet pair for SSV-D metering device.**

## P203 Series Pump

These pumps are electrically operated and are used in progressive-type automated lubrication systems. The proven and reliable P203 pump has been designed to develop high operating pressures allowing it to supply NLGI #2 grease in most ambient temperatures.

Versatile, compact and ecomomical, this pump can be enhanced with several options including an integrated controller, low-level monitoring and system monitoring. Special configurations are available upon request.

**Note: Customer must furnish a 12- or 24-volt D.C. power source.**

## Electric Grease Pumps with Integrated On/Off Controller

| | |
|---|---|
| **Output/Min Per Element**:** | .171 cu. in. / 2.8 cc |
| **Lubricant Outlet:** | ⅛" NPT (F) |
| **Max. System Operating Pressure:** | 5000 psig / 350 bar |
| **Enclosure Rating:** | IP6K9K* |
| **Operating Temperature Range:** | Min. -13°F / -25°C / Max. 158°F / 70°C |
| **Reservoir Capacity:** | 2-, 4-, 8- or 15-liter *** |
| **Reservoir Fill Method:** | By grease fitting |
| **Pressure Relief Valve:** | 4000 psi, +/- 250 psi / 276 bar, +/- 17 bar |

* Protected from water sprayed in all directions.
** Single 6mm element standard; to increase pump output, add one or two additional element(s) #600-26876-2 and relief valve #270864.
*** Pressure relief valve included with these models.

## Model Specifications

| Model No. | Electrical Requirements | Interval Timer Setting | | | | Reservoir Capacity | | |
|---|---|---|---|---|---|---|---|---|
| | | On Time* (2 minute increments) | | Off Time (1 hour increment) | | lb. | kg. | liter |
| | | Min | Max | Min | Max | | | |
| 94012 | 12 VDC / 3.5 Amps | 2 minutes | 30 minutes | 1 hour | 15 hours | 4 | 1.8 | 2 |
| 94412 | | | | | | 8 | 3.6 | 4 |
| 94812 | | | | | | 16 | 7.2 | 8 |
| 94412LDL | | | | | | 8 | 3.6 | 4 |
| 94812LDL | | | | | | 16 | 7.2 | 8 |
| 94024 | 24 VDC / 2 Amp | | | | | 4 | 1.8 | 2 |
| 94424 | | | | | | 8 | 3.6 | 4 |
| 94824 | | | | | | 16 | 7.2 | 8 |
| 94824LDL | | | | | | 16 | 7.2 | 8 |
| 644-46278-1 | | | | | | 30 | 13.6 | 15 |

* Can be set for either minutes or seconds.

## Electric Grease Pumps Without Integrated Controller Model Specifications

| Model No. | Electrical Requirements | Reservoir Capacity | | |
|---|---|---|---|---|
| | | lb. | kg. | Liters |
| 94224 | 24 VDC - 2 Amps | 4 | 1.8 | 2 |
| 94212 | 12 VDC - 3.5 Amps | | | |
| 644-46278-3 | 24 VDC - 2 Amps | 30 | 13.6 | 15 |

## Electric Grease Pumps with Low-Level Sensor and Integrated Controller for Feedback Monitoring

Supplies NLGI #2 grease (depending on temperature) to divider valves.

| Electrical Requirements | |
|---|---|
| **Input:** | 12 VDC @ 3.5 amps, 24 VDC @ 2 amps 94 - 265 VAC (50 to 60 Hz) |
| **Enclosure Rating:** | IP6K9K * |
| **Interval Between Lube Cycles:** | Min. 4 minutes / Max. 15 hours |
| **Pump Output:** | 0.171 cu. in./min. / 2.8 cc/min. |
| **Outlet Connection:** | ⅛" NPT (F) |
| **Reservoir Capacity:** | 2-, 4-, 8- or 15-liter ** |
| **Maximum Recommended Operating Pressure:** | 5000 psi / 350 bar |
| **Lubricant:** | Greases NLGI grade 2 (depending on operating temperature and type of lubricant) |
| **Temperature Range:** | -13°F to 158°F / -25°C to 70°C |
| **Pressure Relief Valve:** | 4000 psi, +/- 250 psi / 276 bar, +/- 17 bar |

**Note:** Do not use pump without pressure relief valve.

* Protected from water sprayed in all directions.

## Model Specifications

| Model No. | Description | Power | Control Settings | | | Reservoir Capacity | | |
|---|---|---|---|---|---|---|---|---|
| | | | Interval Between Lube Cycle Min. | Interval Between Lube Cycle Hrs. | Alarm Time Min. | Liters | In³ | Lbs. |
| 94222 | P203-2XL-1K6-24-2A6.15-M13-A+SV | 24 VDC | 4 - 60 | 1 -15 | 5 or 30 | 2 | 122 | 4 |
| 94422 | P203-4XLBO-1K6-24-2A6.15-M13-A+SV | 24 VDC | 4 - 60 | 1 -15 | 5 or 30 | 4 | 244 | 8 |
| 94822 | P203-8XLBO-1K6-24-2A6.15-M13-A+SV | 24 VDC | 4 - 60 | 1 -15 | 5 or 30 | 8 | 488 | 16 |
| 94822LDL | P203-8XL-1K6-24-2A6.15-M13-A+SV | 24 VDC | 4 - 60 | 1 - 15 | 5 or 30 | 8 | 488 | 16 |
| 644-40987-2 | P203-15XL-1K6-24-2A6.15-M13-A+SV | 24 VDC | 4 - 60 | 1 -15 | 5 or 30 | 15 | 915 | 30 |
| 644-40821-6 * | P203-2XLBO-1K6-12-2A6.15-M08 | 12 VDC | 4 - 60 | 1 -15 | 5 or 30 | 2 | 122 | 4 |
| 644-40843-8 * | P203-4XLBO-1K6-12-2A6.15-M08 | 12 VDC | 4 - 60 | 1 -15 | 5 or 30 | 4 | 244 | 8 |
| 644-40822-8 * | P203-8XLBO-1K6-12-2A6.15-M16 | 12 VDC | 4 - 60 | 1 -15 | 5 or 30 | 8 | 488 | 16 |
| 644-40873-1 * | P203-8XLBO-1K6-AC-3A6.15-M08 | 120 VAC | 4 - 60 | 1 -15 | 5 or 30 | 8 | 488 | 16 |

***These "644-" pumps do not come with the pressure relief valve. It must be ordered separately and is recommended. The ⅛" NPT adapter (304-19614-1) is also not included and must be ordered separately, if required. None of the above pumps come with the proximity switch. This must be ordered separately.**

## Electric Grease Pump with RemoteLinc™ Technology

- Easily interfaces with OEM and aftermarket telematics systems
- Allows users to:
  - Remotely monitor and detect low lubricant levels and system faults.
  - Reduce cost by receiving immediate, real-time alerts when lubricant is low or the system is in fault.

| Electrical Requirements | |
|---|---|
| **Input:** | 12 VDC @ 3.5 amps, 24 VDC @ 2 amps<br>94-265 VAC (50 to 60 Hz) |
| **Enclosure Rating:** | IP6K9K* |
| **Interval Between Lube Cycles:** | Min. 4 minutes / Max. 15 hours |
| **Pump Output:** | 0.171 cu. in./min. / 2.8 cc/min. |
| **Outlet Connection:** | 1/8” NPT (F) |
| **Reservoir Capacity:** | 2-, 4-, 8- or 15-liter** |
| **Maximum Recommended Operating Pressure:** | 5000 psi / 350 bar |
| **Lubricant:** | Greases NLGI grade 2 (depending on operating temperature and type of lubricant) |
| **Temperature Range:** | -13°F to +158°F / -25°C to +70°C |
| **Pressure Relief Valve:** | 4000 psi, ±250 psi / 276 bar, ±17 bar |

## Model Specifications

| Model No. | Voltage | Reservoir Capacity |
|---|---|---|
| 94223-12 | 12VDC | 2L |
| 94423-12 | 12VDC | 4L |
| 94823-12 | 12VDC | 8L |
| 94223 | 24VDC | 2L |
| 94423 | 24VDC | 4L |
| 94423LDL | 24VDC | 4L (Lidless) |
| 94823 | 24VDC | 8L |
| 94823LDL | 24VDC | 8L (Lidless) |
| 94923 | 24VDC | 15L |
| 94223-AC | 94-265VAC | 2L |
| 94423-AC | 94-265VAC | 4L |
| 94823-AC | 94-265VAC | 8L |

None of the above pumps come with a proximity switch. This must be ordered separately.

## 203 AC Models

This VAC pump automatically adjusts to handle a variety of electrical supply voltages (between 94- and 265-volt, 50 to 60 Hz.)

| | |
|---|---|
| **Input Voltage:** | 94 - 265 VAC, 3 Amps |
| **Operating Temperature:** | -13° to 158°F / -25° to 70°C |
| **Number and Element Size:** | 1 - 6mm |
| **Reservoir Capacity:** | 2-, 4-, 8- or 15-liter * |
| **Output per Minute:** | Approx. 2.8 cc / 0.171 cu. in. per min. |
| **Lubricant:** | Greases up to NGLI #2/Oil with at least 40 cSt |
| **Max. Operating Pressure:** | 5076 psi / 350 bar |

* Contact Lincoln for 15-liter reservoir models.

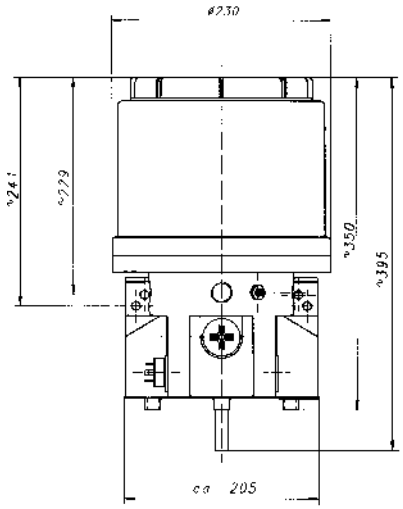


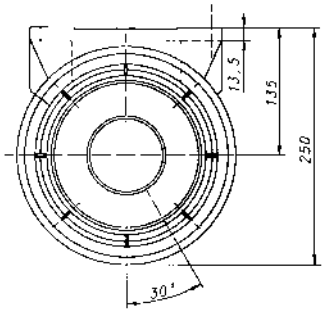


## Model Specifications

| Model No. | Description | Res. Cap. | Grease or Oil | Low level control | Printed circuit board |
|---|---|---|---|---|---|
| 644-46073-5 | P203-2XNBO-1K6-AC-1A1.01-V10 (UL)-A+SV | 2 liter | Grease | No | Yes |
| 644-46173-4 | P203-4XNBO-1K6-AC-1A1.01-V10 (UL)-A+SV | 4 liter | Grease | No | Yes |
| 644-46173-5 | P203-4YLBO-1K6-AC-1A1.01-V10 UL)-A+SV | 4 liter | Oil | Yes | Yes |
| 644-46073-6 | P203-2XNBO-1K6-AC-1A1.01 (UL)-A+SV | 2 liter | Grease | No | No |
| 644-46173-6 | P203-4XLBO-1K6-AC-2A1.01 (UL)-A+SV | 4 liter | Grease | Yes | No |
| 644-46173-8 | P203-4YLBO-1K6-AC-1A1.01 (UL)-A+SV | 4 liter | Oil | Yes | No |
| 644-46173-7 | P203-4XNBO-1K6-AC-1A1.01 (UL)-A+SV | 4 liter | Grease | No | No |
| 644-46174-2 | P203-8XLBO-1K6-AC-2A1.01-V10 (UL)-A+SV | 8 liter | Grease | Yes | Yes |
| 644-46174-4 | P203-8XLBO-1K6-AC-2A1.01 (UL)-A+SV | 8 liter | Grease | Yes | No |

"(UL)" in the description refers to UL-approved, CSA-certified pumps.
Pumps with "-A+SV" come complete with the ⅛" NPT adapter and pressure relief valve.

# Quicklub® Lubrication Systems

## *Identification Code—Pump Models 203*

LINCOLN

**Examples of Codes**

Note
Any pumps combination other than the above standard pumps can be composed and ordered in accordance with the valid model identification code

| | | | | | | | | | | | |
|---|---|---|---|---|---|---|---|---|---|---|---|
| P 203 | 2 | X | N | | 1 | K6 | 24 | 1A | 1 | 10 | |
| P 203 | 4 | X | N | BO | 1 | KR | 24 | 2A | 6 | 15 | M13 |
| P 203 | 2 | X | N | | 2 | K5 | 12 | 1A | 1 | 10 | H |
| P 203 | 8 | X | N | BO | 1 | K6 | 24 | 1A | 5 | 14 | V13 |
| P 203 | 4 | Y | L | BO | 1 | K7 | 24 | 1A | 1 | 10 | V20 |
| P 203 | 2 | X | L | | 1 | K6 | 24 | 1A | 7 | 16 | V10 |

*Basic pump model for grease or oil with 1-3 outlets*

**Reservoir Design**
2 = 2 l transparent plastic reservoir
4 = 4 l transparent plastic reservoir
8 = 8 l transparent plastic reservoir
15 = 15 l transparent plastic reservoir

X = reservoir for grease
Y= reservoir for oil

N = standard design
L = low-level control

without designation = standard reservoir (2 l)
BO = filling from top
FL = flat type reservoir (for 2l, no low level)

**Pumping Element**
1 - 3 number of elements

**Piston Type - Piston Diameter (selection see page 20)**
K5 - 5 mm
K6 - 6 mm
K7 - 7 mm
KR adjustable - 7 mm
B7 - 7 mm (outlet same as K5)
S7 - 7 mm (food industry)

**Operating Voltage**
12 VDC or 24 VDC (DC motor)
AC = 94 - 265 VAC (47 - 63 HZ) with 24 VDC motor

**Number of Connection Possibilities**
1A = 1 connector (left), power supply [1]
1A = 1 connector (left), power supply [2]
1A = 1 connector, power supply left + illuminated push button for additional lubrication, low level [3, C]
2A = 2 connectors, power supply (left) [1, +] illuminated push button for additional lubrication, low-level (right) [1, C] (V10 - V13, V20 - V23, H)
2A = 2 connectors, power supply (left) + illuminated push button for additional lubrication , low-level (left) )[3, C] and piston detector (right) [4] (M08 - M23)

**Type of Connection**
1 = square type connector (DIN 43650, type A) [1]
5 = bayonet plug, 4/3 , DIN 72585-1 [2] (V10-V13, V20-V23, H)
6 = bayonet plug, 7/5 , DIN 72585-13) (M08-M23)
7 = bayonet plug, 7/6 , DIN 72585-1 [3] (V10-V13, V20-V23)

**Connection Outside the Pump**
00 = without socket outlet, without cable
01 = socket outlet, without cable [1]
10 = socket outlet, with 10 m cable [1]
11 = socket outlet, with 10 m ADR cable [A, 1]
14 = socket for bayonet, with 10 m cable, 4/3 [2], V10-V13, V 20-V23, no low level, no illuminated push button [C]
15 = socket for bayonet with 10 m cable, 7/5 [3], M08-M23
16 = socket for bayonet, with 10 m cable, 7/6g [3], V10-V13, V 20-V23, with low level or illuminated push button [C]
17 = socket for bayonet with 10 m ADR-Cable [A], 4/3 [2], (V10-V13, H)

**P.C.B. for 12 / 24 VDC**
V10 - V13 = adjustable pause and operating time [1, 2, 3]
H = for trailers and semi trailers [1, 2]
without designation = without p.c.b. [1, 2]
M08 - M23 = with microprocessor control [3] different model in accordance to the jumper position
No designation, pump without control p.c.b.

*The Figures [1, 2, 3] are in conjunction with those of the "Type of connection" determining the connector you could use*
*[A] For hazardous material transport*
*[B] C7 = for supply of chisel paste*
*[C] low level for oil; the connection for low level is not taken into consideration*
***Special order Quicklub pumps require a delivery time of six to eight weeks.***

## 233 Pumps with Data Logger QuickData

The 233 centralized lubrication pump is a powerful and robust compact multi-line pump that can drive up to three elements and is used in progressive (Quicklub or Modular Lube) automated lubrication systems. The 233 is ideal for mobile applications, rental machines and construction machines. Versatile, compact and economical, this pump is enhanced with low-level control, printed circuit board MDF01 with attached data logger module and a keypad with display.

QuickData Displays
- Current status and operating data
- Malfunctions of the lubrication system with the time of occurrence
- Remedying of the malfunction with date, time and duration of malfunction
- Low-level signal of reservoir and regular refilling
- Modifications in the pause time programming
- Number of automatically and manually triggered lube cycles as well as the corresponding lubricant consumption
- Power supply interruptions

The QuickData software is updated and all data can be read out by using an off-the-shelf, infared IrDa-to-USB adapter. All indications enable the users to draw their conclusions regarding the condition, function, reliability, usability and duration of service of the machine or the device. All information can be analyzed and documented and is then available as a written protocol. The family of 233 pumps includes 12 and 24 VDC and 120 VAC pumps. They are available with 1, 2 or 3 elements in 5, 6 or 7 mm or with an adjustable output element. Reservoir sizes are 2, 4 or 8 liters. Refer to the pump identification code for a complete listing of available pump configurations.

## Model Specifications

| Model No. | Description | Power | Reservoir Capacity | | | Grease | Low-Level Control | Printed circuit board |
|---|---|---|---|---|---|---|---|---|
| | | | Liters | In³ | Lbs. | | | |
| 644-40824-1 | P233-2XL-1K6-24-2A5.10-MDF | 24 VDC | 2 | 122 | 4 | Yes | Yes | Yes |
| 644-40824-2 | P233-2XLBO-1K6-24-2A5.10-MDF | 24 VDC | 2 | 122 | 4 | Yes | | |
| 644-40826-1 | P233-4XLBO-1K6-24-2A5.10-MDF | 24 VDC | 4 | 244 | 8 | Yes | | |
| 94434LDL | P233-4XL-1K6-24-2A5.10-MDF | 24 VDC | 4 | 244 | 8 | Yes | | |
| 644-40827-1 | P233-8XLBO-1K6-24-2A5.10-MDF | 24 VDC | 8 | 488 | 16 | Yes | | |
| 94834LDL | P233-8XL-1k6-24-2A5.10-MDF | 24 VDC | 8 | 488 | 16 | Yes | | |
| 644-41040-1 | P233-15XL-1K6-24-2A5.10-MDF | 24 VDC | 15 | 915 | 30 | Yes | | |
| 644-40868-1 | P233-2XL-1K6-12-2A5.10-MDF-A | 12 VDC | 2 | 122 | 4 | Yes | | |
| 644-40869-1 | P233-4XLBO-1K6-12-2A5.10-MDF-A | 12 VDC | 4 | 244 | 8 | Yes | | |
| 644-40870-1 | P233-8XLBO-1K6-12-2A5.10-MDF-A | 12 VDC | 8 | 488 | 16 | Yes | | |
| 644-40867-1 | P233-8XLBO-1K6-AC-3A6.15-MDF | 120 VAC | 8 | 488 | 16 | Yes | | |

*These pumps do not include a pressure relief valve or proximity switch which must be ordered separately.*
Other technical data and dimensions are identical to the P203.

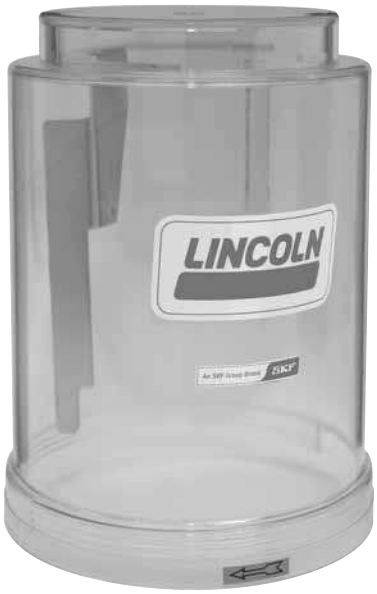


## Lidless Pump Upgrade Options

Now available: Retrofit kits to field replace current 4L and 8L Model 203 reservoirs to ones without lids. The retrofit kit promotes good maintenance practice and improves system performance by eliminating grease contamination through the removable lid. For each field retrofit kit, two part numbers need to be ordered (see model numbers below):

- One part number for the reservoir
- One part number for the fixed paddle

**Assembly is required.** The fixed paddle snaps in place and the new reservoir gasket replaces the old one.

| Model No. | Description |
|---|---|
| 544-32695-1 | Reservoir 4XN/4YN |
| 444-70490-1 | Fixed Paddle assy, 4XNBO/4YNBO |
| 544-32696-1 | Reservoir 8XN/BYN |
| 444-70491-1 | Fixed Paddle assy, 8XNBO/8YNBO |

## Lidded Pump Upgrade Option

These two kits are used to upgrade a 2-liter reservoir to either a 4- or 8-liter reservoir (with lid) pump. These upgrades are for pumps without low-level monitoring.

| Model No. | Description |
|---|---|
| 544-32022-1 | 4-Liter Conversion Kit |
| 544-32023-1 | 8-Liter Conversion Kit |

## 15-Liter Upgrade Kit

Converts 4- and 8-liter model Quicklub pump to 15-liter reservoir with low level.

| Model No. | Description |
|---|---|
| 544-32957-2 | 4- and 8-Liter Conversion Kit |

## QLS 401

The QLS 401 features a newly enhanced stirring paddle in the reservoir to prevent grease separation—even with long refill intervals. All components including an internal pressure relief valve are part of the complete package. Standard features include a built-in controller with LED display and keypad for easy programming and monitoring, and a divider block with 6, 8, 12 or 18 outlets. The integrated, all-in-one system concept reduces installation time and costs. The 12 and 24 VDC models are available with bayonet, quarter-turn type plugs for improved protection in mobile applications (optional low-level control).

| | |
|---|---|
| **Operating Voltage:** | 12 and 24 VDC<br>120 and 230 VAC, 50/60 Hz |
| **Operating Current:** | 12 VDC / 2.0 A<br>24 VDC / 1.0 A<br>120 VAC / 1.0 A<br>230 VAC / 0.5 A |
| **Operating Temperature:** | -13° to 158°F / -25° to 70°C |
| **Number of Outlets:** | 6, 8, 12 or 18 |
| **Reservoir Capacity:** | 61 in³ / 1.0 L / 2.0 L |
| **Protection:** | NEMA 4 |
| **Lubrication Cycle Time:** | AC: 20 min. to 60 hours<br>DC: 4 min. to 6 hours |
| **Number of Cycles:** | For VDC: 1 to 5 cycles<br>For VAC – SSV6/SSV8: 1 to 3 cycles<br>For SSV12/SSV18: 1 cycle |
| **Timer Memory:** | Indefinite |
| **Max. Operating Pressure:** | 3000 psig / 205 bar |
| **Output per Outlet & Cycle:** | approx. 0.012 in³ / approx. 0.2 cm³ |
| **Lubricant:** | NLGI 2 grease |
| **Weight** | 12.5 lbs. / 5.7 kg |

## Model Specifications

| Model No. | Valve Type | Valve Mount | Volt | Cable |
|---|---|---|---|---|
| P401 31202574 | SSV6 | Back | 12 VDC | 30’ / 10m |
| P401 31402574 | SSV6 | Back | 24 VDC | 30’ / 10m |
| P401 42601114 | SSV8 | Bottom | 120 VAC-UL | none |
| P401 42801114 | SSV8 | Bottom | 230 VAC-UL | none |
| P401 61202574 | SSV12 | Back | 12 VDC | 30’ / 10m |
| P401 61402574 | SSV12 | Back | 24 VDC | 30’ / 10m |
| P401 62601114 | SSV12 | Bottom | 120 VAC-UL | none |
| P401 62801114 | SSV12 | Bottom | 230 VAC-UL | none |
| P401 91202574 | SSV18 | Back | 12 VDC | 30’ / 10m |
| P401 91402574 | SSV18 | Back | 24 VDC | 30’ / 10m |
| P401 92601114 | SSV18 | Bottom | 120 VAC-UL | none |
| P401 92801114 | SSV18 | Bottom | 230 VAC-UL | none |

## QLS 401 for Remote Control

The QLS 401 for Remote Control allows customers to be in control of the lubrication process. The 24 VDC models monitor system cycling with a proximity switch. An external timer or PLC controls the interval between lube cycles. The 120 VAC models have no cycle monitoring and are on/off controlled by the user's external timer or PLC. The minimum pause time requirements should be followed when setting up the external controller. (Optional low-level control)

| | |
|---|---|
| **Operating Voltage:** | 24 VDC<br>120 VAC, 50/60 Hz |
| **Operating Current:** | 24 VDC / 1.0 A<br>120 VAC / 1.0 A |
| **Operating Temperature:** | -10° to 158°F / -25° to 70°C |
| **Number of Outlets:** | 6, 8, 12 or 18 |
| **Reservoir Capacity:** | 61 in³ / 1.0 L |
| **Protection:** | NEMA 4 |
| **Minimum Pause Time:** | 4 min. DC models / 20 min. AC models |
| **Maximum Operating Time:** | 25 min. DC models / 15 min. AC models |
| **Timer Memory:** | Indefinite |
| **Maximum Operating Pressure:** | 3000 psig / 205 bar |
| **Output per Outlet & Cycle:** | approx. 0.012 in³ / approx. 0.2 cm³ |
| **Lubricant:** | up to NLGI 2 grease |
| **Weight** | 12.5 lbs. / 5.7 kg |

## Model Specifications

| Model No. | Valve Type | Valve Mount | Volt |
|---|---|---|---|
| P401 31401110 | SSV6 | Back | 24 VDC |
| 650-40915-8 | SSV8 | Bottom | 120 VAC-UL |
| P401 61401110 | SSV12 | Back | 24 VDC |
| 650-40915-9 | SSV12 | Bottom | 120 VAC-UL |
| P401 91401110 | SSV18 | Back | 24 VDC |

**Pump Models**
**Examples of part numbers**

**P40100400114**
**P40162400154**

**P401 6 2 4 0 0 1 5 4**

**Pump 401 for grease** . . . . . **P401**

**SSV Divider Block**
External, SSV 6, SSV 8[2]) (or SSV 12 and 18 without control p.c.b.) . . . . . **0**
External, SSV 12, SSV 18[2]) . . . . . **1**
SSV 6 (back) . . . . . **3**
SSV 8 (bottom) . . . . . **4**
SSV 12 . . . . . **6**
SSV 18 . . . . . **9**

*[2] Note: For external divider block application only use the specific divider blocks SSV....KNQLS.*

**SSV Divider Block Position**
External divider block. . . . . **0**
Back (vertical order). . . . . **1**
Bottom[3] (horizontal order). . . . . **2**

*[3] Note: Do not use QLS 401 with SSV block in bottom-mounting position for mobile applications. Do not install the pump in areas exposed to shock.*

**Operating Voltage**
12 VDC[1] . . . . . **2**
24 VDC[1] . . . . . **4**
120 VAC[2] (with control p.c.b. only) . . . . . **6**
230 VAC[2] (with control p.c.b. only) . . . . . **8**

*[1] Note: Standard 12 and 24 VDC pump models for mobile applications can be supplied with 10-meter (30') electrical cable.*
*[2] Note: Standard 120 and 230 VAC pump models for industry are supplied without electrical cable.*

**Reservoir**
1 liter reservoir without low-level control . . . . . **0**
1 liter reservoir with low-level control . . . . . **1**
2 liter reservoir without low-level control . . . . . **2**
2 liter reservoir with low-level control . . . . . **3**

**Number of Possible Connections**
-1A = connection left-side (square type), supply voltage . . . . . **0**
-2A = 2 connections (square type) . . . . . .
1 connection left-side, supply voltage . . . . . **1**
1 connection right-side, low-level control or fault indication . . . . . .
1A = 1 connection (quarter-turn bayonet-type) supply voltage;
low-level control or fault indication (DC models only) . . . . . **2**

**Type of Plug Connector**
Square-type, acc. to DIN 43650 type of construction A . . . . . **1**
(industrial application)
Quarter-turn bayonet-type plug, DIN 72585-1, 4-pole
(mobile application; DC models only). . . . . **5**

**Electrical Connectors**
With socket, without cable . . . . . **1**
With socket, with cable 10 m. . . . . **5**
With socket, with cable 10 m (DC models only). . . . . **7**

**Control p. c. b.**
p. c. b. without time control (DC models). . . . . **0**
p. c. b. S4:
Normally closed or normally open contact (programmable),
monitored:1 to 5 cycles (DC models). . . . . .
1 cycle with SSV 12, SSV 18 (AC models)
1 to 3 cycles with SSV 6, SSV 8 (AC models). . . . . **4**

## QLS 301

It's compact, rugged, easy to install and easy to use. It has a long list of standard features including built-in controller with LED display and keypad for easy programming, system cycle monitoring, a built-in low-level control and remote monitoring capability. For those who thought the reduced downtime and improved safety of automated lubrication were out of reach, and for those waiting for a cost-effective system for their smaller machinery, the reliable QLS 301 is the answer. It's automatic lubrication "made easy." Same as QLS 401 except has spring-loaded follower allowing for mounting pump horizontally.

| | |
|---|---|
| **Operating Voltage:** | 12 and 24 VDC<br>120 and 230 VAC, 50/60 Hz |
| **Operating Current:** | 12 VDC / 2.0 A<br>24 VDC / 1.0 A<br>120 VAC / 1.0 A<br>230 VAC / 0.5 A |
| **Operating Temperature:** | -10° to 158°F / -25° to 70°C |
| **Number of Outlets:** | 6, 8, 12 or 18 |
| **Reservoir Capacity:** | 61 in³ / 1.0 L |
| **Protection:** | NEMA 4 |
| **Lubrication Cycle Time:** | AC: 20 min. to 60 hours<br>DC: 4 min. to 60 hours |
| **Number of Cycles:** | For VDC: 1 to 5 cycles<br>For VAC – SSV6/SSV8: 1 to 3 cycles<br>For SSV12/SSV18: 1 cycle |
| **Timer Memory:** | Indefinite |
| **Maximum Operating Pressure:** | 3000 psig / 205 bar |
| **Output per Outlet & Cycle:** | approx. 0.012 in³ / approx. 0.2 cm³ |
| **Lubricant:** | NLGI 2 grease |
| **Weight** | 12.5 lbs. / 5.7 kg |

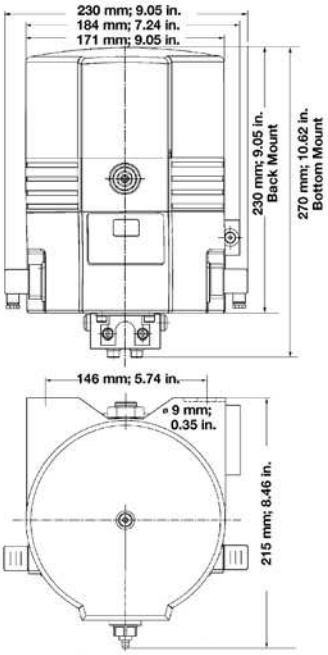


## Model Specifications

| Model No. | Valve Type | Valve Mount | Volt | Cable |
|---|---|---|---|---|
| P301 31211154 | SSV6 | Back | 12 DC | 30' / 10m |
| P301 31411154 | SSV6 | Back | 24 DC | 30' / 10m |
| P301 42611114 | SSV8 | Bottom | 120 AC | none |
| P301 42811114 | SSV8 | Bottom | 230 AC | none |
| P301 61211154 | SSV12 | Back | 12 DC | 30' / 10m |
| P301 61411154 | SSV12 | Back | 24 DC | 30' / 10m |
| P301 62611114 | SSV12 | Bottom | 120 AC | none |
| P301 62811114 | SSV12 | Bottom | 230 AC | none |
| P301 91211154 | SSV18 | Back | 12 DC | 30' / 10m |
| P301 91411154 | SSV18 | Back | 24 DC | 30' / 10m |
| P301 92611114 | SSV18 | Bottom | 120 AC | none |
| P301 92811114 | SSV18 | Bottom | 230 AC | none |

**Note:** All models include low-level.

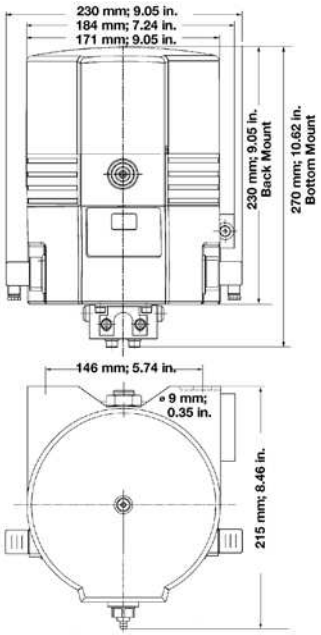


## QLS 311

Unit includes pump, control monitor and metering valve and is ready to go "out of the box." Pump includes built-in controller with LED display and keypad for easy programming, system cycle monitoring, a built-in low-level control and remote monitoring capability. Unit offers the advantages of automated lubrication, including reduced downtime and improved safety, to machinery large and small.

| | |
|---|---|
| **Operating Voltage:** | 12 and 24 VDC<br>120 and 230 VAC; 50/60 Hz |
| **Operating Current:** | 12 VDC / 2.0 A<br>24 VDC / 1.0 A<br>120 VAC / 1.0 A<br>230 VAC / 0.5 A |
| **Operating Temperature:** | -10° to 158°F / -25° to 70°C |
| **Number of Outlets:** | 6, 8, 12 or 18 |
| **Reservoir Capacity:** | 61 in³ / 1.0 L |
| **Protection:** | NEMA 4 |
| **Lubrication Cycle Time:** | AC: 20 min. to 60 hours<br>DC: 4 min. to 60 hours |
| **Number of Cycles:** | For VDC: 1 to 5 cycles<br>For VAC – SSV6/SSV8: 1 to 3 cycles<br>For SSV12/SSV18: 1 cycle |
| **Timer Memory:** | Indefinite |
| **Max. Operating Pressure:** | 1160 psig / 80 bar |
| **Output per Outlet & Cycle:** | approx. 0.012 in³ / approx. 0.2 cm³ |
| **Lubricant:** | oil with at least 40cSt. |
| **Weight** | 12.5 lbs. / 5.7 kg |

## Model Specifications

| Model No. | Valve Type | Valve Mount | Volt | Cable |
|---|---|---|---|---|
| P311 31211154 | SSV6 | Back | 12 DC | 30' / 10m |
| P311 61211154 | SSV12 | Back | 12 DC | 30' / 10m |
| P311 91211154 | SSV18 | Back | 12 DC | 30' / 10m |
| P311 31411154 | SSV6 | Back | 24 DC | 30' / 10m |
| P311 61411154 | SSV12 | Back | 24 DC | 30' / 10m |
| P311 91411154 | SSV18 | Back | 24 DC | 30' / 10m |
| P311 42611114 | SSV8 | Bottom | 120 AC | none |
| P311 42811114 | SSV8 | Bottom | 230 AC | none |
| P311 62611114 | SSV12 | Bottom | 120 AC | none |
| P311 92611114 | SSV18 | Bottom | 120 AC | none |
| P311 62811114 | SSV12 | Bottom | 230 AC | none |
| P311 92811114 | SSV18 | Bottom | 230 AC | none |

**Note:** All models come with a low-level indicator.

## QLS 301/311 for Remote Control

The QLS 301/311 for Remote Control allows customers to be in control of the lubrication process. The 24 VDC models monitor system cycling with a proximity switch. An external timer or PLC controls the interval between lube cycles. The 120 VAC models have no cycle monitoring and are on/off controlled by the user's external timer or PLC. The minimum pause time requirements should be followed when setting up the external controller.

| | |
|---|---|
| **Operating Voltage:** | 24 VDC<br>120 VAC, 50/60 Hz |
| **Operating Current:** | 24 VDC / 1.0 A<br>120 VAC / 1.0 A |
| **Operating Temperature:** | -10° to 158°F / -25° to 70°C |
| **Number of Outlets:** | 6, 8, 12 or 18 |
| **Reservoir Capacity:** | 61 in³ / 1.0 L |
| **Protection:** | NEMA 4 |
| **Minimum Pause Time:** | 4 min. DC models / 20 min. AC models |
| **Maximum Operating Time:** | 25 min. DC models / 15 min. AC models |
| **Timer Memory:** | Indefinite |
| **Maximum Operating Pressure:** | **Grease:** 3000 psig / 205 bar<br>**Oil:** 1160 psi / 80 bar |
| **Output per Outlet & Cycle:** | approx. 0.012 in³ / approx. 0.2 cm³ |
| **Lubricant:** | up to NLGI 2 grease or oil with at least 40cSt. |
| **Weight** | 12.5 lbs. / 5.7 kg |

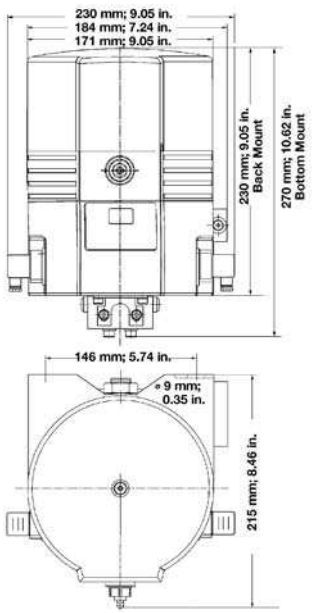


## Model Specifications

| Model No. | Valve Type | Valve Mount | Volt | Lubricant |
|---|---|---|---|---|
| P301 31411110 | SSV6 | Back | 24 VDC | Grease |
| P311 31411110 | SSV6 | Back | 24 VDC | Oil |
| P311 61411110 | SSV12 | Back | 24 VDC | Oil |
| 650-40768-3 | SSV8 | Bottom | 120 VAC | Grease |
| 650-40768-4 | SSV12 | Bottom | 120 VAC | Grease |
| 650-40768-5 | SSV18 | Bottom | 120 VAC | Grease |
| 650-40765-4 | SSV8 | Bottom | 120 VAC | Oil |

## QLS 421

Accurate lubrication without the need for continuous power—that's what over-theroad trailers need. That's exactly what Lincoln's QLS 421 supplies. With a unique controller card that keeps track of the time a trailer is in use by monitoring its vibration, the QLS 421 delivers the precise lubrication an OTR trailer requires exactly when it's needed—by using the power of the trailer's brake lights.

Because it doesn't need power to monitor the time between lubrication events, the QLS 421 is ready when its controller card says "go." And the QLS 421 keeps lubricating each time the trailer's brakes are applied until its controller card adds up the "on times" and determines that the pre-set time for a complete lubrication cycle has been reached. The QLS 421 features an enhanced stirring paddle to help prevent grease separation in applications with long refill intervals.

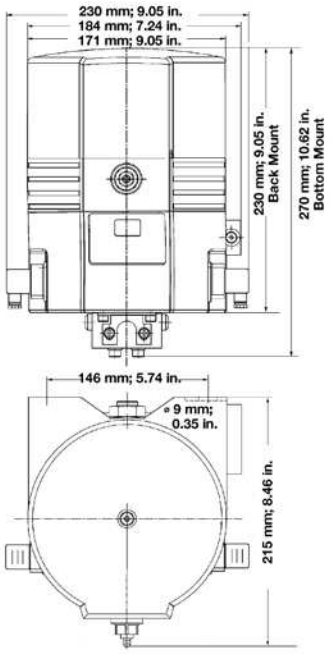


| | |
|---|---|
| **Operating Voltage:** | 12 and 24 VDC |
| **Operating Current:** | 12 VDC / 2.0 A<br>24 VDC / 1.0 A |
| **Operating Temperature:** | -10° to 158°F / -25° to 70°C |
| **Number of Outlets:** | 6, 12 or 18 |
| **Reservoir Capacity:** | 61 in³ / 1.0 L |
| **Protection:** | NEMA 4 |
| **Time Between Cycles:** | 1 hour to 16 hours |
| **On Time Range:** | 1 to 32 min. |
| **Timer Memory:** | Indefinite |
| **Maximum Operating Pressure:** | 3000 psig / 205 bar |
| **Output per Outlet per Valve Cycle:** | approx. 0.012 in³ / approx. 0.2 cm³ |
| **Lubricant:** | up to NLGI 2 grease |
| **Weight** | 12.5 lbs. / 5.7 kg |

## Model Specifications

| Model No. | Voltage | Valve Type | Reservoir Size (L) | Valve Mount | Cable |
|---|---|---|---|---|---|
| P421 91402531 | 24 VDC | SSV18 | 1 liter | Back | 19 feet<br>6 meters |
| P421 61202531 | 12 VDC | SSV12 | | | |
| P421 91202531 | | SSV18 | | | |
| P421 61222531 | | SSV12 | 2 liter | | |

## HTL Hydraulic Lubricator Pump for Hammers

- Delivers precise lubrication every time the hammer cycles
- Increase productivity—no work interruption
- Reduces machine repairs and replacement costs

Arms and breakers move constantly and exert enough force to demolish a building or repair roads in a tough environment filled with grit and debris. OEMs recommend bearing lubrication of that hammer every two hours to achieve optimal performance and to hold down maintenance and repair costs. However, deadline-driven operators rarely halt work to grease the hammer, which can lead to breakdowns that grind down productivity and inflate repair expenses. Lincoln's HTL Pumps make precise, consistent lubrication a reality. Now your operator can lubricate the hammer without leaving the cab. The pumps attach directly to the hammer, and your operator, with the push of a pedal, automatically sends a single shot of hydraulic fluid to the pump. Then the pump gives one shot of grease to lubricate the bearing points. When the operator's foot comes off the pedal, pressure releases the spring in the pump so it's ready to lubricate again.

Applications: construction OEMs, hydraulic hammer retrofits, demolition attachments and medium to larger breakers/hammers

- Withstands vibrations of an operating hammer
- Travels with hammer, perfect for rental equipment or hammers used on various machines
- Hydraulic power supply
- Pedal-actuated
- Attached grease fitting allows for manual filling and fast priming of pump
- Uses standard 14.5-ounce grease cartridges and handles chisel paste
- To adjust output, metering plugs are available (0.006 in³ [0.1cm³] to 0.031 in³ [0.5cm³])
- Convenient visual low level indicator

| | |
|---|---|
| **Operating Temperature:** | -10°F to +180°F / -23°C to +80°C |
| **Hydraulic Port:** | SAE #4 ( 7⁄16-20 UNF) O-ring |
| **Pump Outlet:** | SAE #4 ( 7⁄16-20 UNF) O-ring |
| **Weight (Empty):** | 16.3 lbs. / 7.4 kg |
| **Weight (Full):** | 17.3 lbs. / 7.8 kg |

## Specifications

| **Model No.** | 85429 | 85425 | 85424 | 85414 |
|---|---|---|---|---|
| **Hydraulic Ratio at Max. Output and Pressure*** | 2.4:1 | 0.7:1 | | |
| **Max. Hydraulic Operating Pressure:** | 2600 psig (112 bar) | 5000 psig (345 bar) | | |
| **Max. Recharge (or Vent) Pressure:** | 400 psig (28 bar) | 1100 psig (75 bar) | 600 psig (41 bar) | 1100 psig (75 bar) |
| **Max. Lube Outlet Pressure:** | 6500 psig (450 bar) | | | |
| **Output per Stroke (Std. Metering Plug)** | .018 cu. in. (0.3 cc) Std. .006 - .031 cu. in. (0.1 - .5 cc) Optional* | | | .031 cu. in. (0.5 cc) Std. .006 - .031 cu. in. (0.1 - .5 cc) Optional* |
| **Grease Reservoir Volume:** | 14.5 oz. | | | |

*Optional metering plugs are available for different output volume. See Pump Output Adjustment chart below.

## Pump Output Adjustment Metering Plug

| Model No. | Output per Stroke |
|---|---|
| 271924 | 0.006 in³ / 0.1 cm³ |
| 271925 | 0.012 in³ / 0.2 cm³ |
| 271926 * | 0.018 in³ / 0.3 cm³ |
| 271927 | 0.031 in³ / 0.5 cm³ |

***Note:** Standard plug included with pump

## 203 Pumps Designed for Hammer Applications*

| Model No. | Description | Low Level | Timer | Element | Reservoir | Voltage | Pressure Relief Valve |
|---|---|---|---|---|---|---|---|
| 271374 | P203-4XNBO-1C7-24-1A1.10 | No | No | 7mm Chisel | 4L | 24 | Yes |
| 272633 | P203-4XLBO-1C7-24-2A1.10 | Yes | No | 7mm Chisel | 4L | 24 | Yes |
| 272643 | P203-4XLBO-1C7-12-2A1.10 | Yes | No | 7mm Chisel | 4L | 12 | Yes |
| 273426 | P203-4XLBO-1K5-24-2A1.10 | Yes | No | 5mm Std. | 4L | 24 | Yes |
| 272632 | P203-8XLBO-1C7-24-2A1.10 | Yes | No | 7mm Chisel | 8L | 24 | Yes |
| 273422 ** | P203-8XLBO-2K7-24-2A1.10 | Yes | No | 2 x 7mm Std. | 8L | 24 | Yes |
| 273425 | P203-8XLBO-1K7-24-2A1.10 | Yes | No | 7mm Std. | 8L | 24 | Yes |

* Chisel paste compatibility must be confirmed by Lincoln technical. ** Pump comes with 272634 kit installed for double output

## 203 Hammer Pump Accessories

| Model No. | Description |
|---|---|
| 272634 | Double output kit (front and side) |
| 274149 | Triple output kit |
| 600-28750-1 | 7mm chisel paste element |
| 274847 | Double output kit (side to side) |

## Push-Button Switches

| Model No. | Description | Color | Voltage |
|---|---|---|---|
| 664-36070-5 | Illuminated Manual Switch | Green | 12 VDC |
| 664-36070-6 | Illuminated Manual Switch | Green | 24 VDC |
| 664-34005-5 | Illuminated Manual Switch | Red | 12VDC |
| 664-34005-6 | Illuminated Manual Switch | Red | 24 VDC |
| 237-13381-2 | Replacement Bulb | | 12 VDC |
| 237-13381-3 | Replacement Bulb | | 24 VDC |
| 236-10580-1 | Replacement Lens | Green | |
| 236-14261-9 | Replacement Lens | Red | |

## Pressure Relief Valves

| Model No. | Pressure Relief Setting | Supply Line Connection |
|---|---|---|
| 270864 | 4000 psi / 270 bar | 1/8" NPT (female) |
| 624-28894-1 | 5076 psi / 350 bar | 6 mm Compression Nut* |
| 624-28895-1 | 5076 psi / 350 bar | 8 mm Compression Nut |
| 624-28931-1** | 5076 psi / 350 bar | 6 mm Quicklinc* |
| 304-19614-1 | Adapter | 6 mm Stem x 1/8" NPT (female) |

* 6 mm x ⅛" NPT supply line adapter (Model 304-19614-1) can be used to convert supply line connection to ⅛" NPT for these models.
** Return to tank
Note: Model 226-14105-5 (psi relief adapter) is required for 4-, 8- and 15-liter pump models

## Proximity Switches

Electric grease pumps with Feedback Monitoring require purchase of one of the following proximity switches:

| Model No. | Description | Use with Corresponding Pump Connection |
|---|---|---|
| 519-34339-3 | Bayonet 3 m (9.8') cable length | 4 - bayonet quarter turn |
| 519-34339-4 | Bayonet 7 m (23.0') cable length | 4 - bayonet quarter turn |
| 519-34271-2 | 3 m (9.8') with open end | |
| 519-34271-7 | AMP 3 m (9.8') cable length | 4 - AMP (existing field models) |
| 519-34271-8 | AMP 7 m (23.0') cable length | 4 - AMP (existing field models) |

## Pump Elements*

| Model No. | Piston Diameter | Lubricant Output | Lubricant | Max. Operating Pressure | Connection Thread |
|---|---|---|---|---|---|
| 600-26875-2 | 5 mm (5K) | .122 in³/min / 2 cm³/min | Oil or Grease | 5000 psi / 350 bar | G 1/4" |
| 600-26876-2 | 6 mm (6K) | .171 in³/min / 2.8 cm³/min | Oil or Grease | | |
| 600-29304-1 | 6 mm | | Beverage Industry Grease or Oil ** | | |
| 600-26877-2 | 7 mm (7K) | .244 in³/min / 4 cm³/min | Oil or Grease | | |
| 600-28750-1 | 7 mm (7C) | | Hammer Chisel Paste *** | | |
| 600-29110-1 | 7 mm (S7) | | Silicon Based Grease | | |
| 600-29185-1 | 7 mm (B7) | | Silicon Based Grease **** | | |
| 655-28716-1 | 7 mm (KR) | .04 in³/min to .18 in³/min<br>.7 cm³/min to 3 cm³/min | Oil or Grease ***** | | |

* Grease and chisel paste compatibility should be confirmed with Lincoln Technical
** Galvanized pump elements to withstand corrosion
*** Special element designed to be used for applications on hydraulic hammers
**** With bypass check valve
***** Adjustable lubricant output pump element.

## Model 85830 ALS Fill Pump

Air-operated grease pump designed to fill pump reservoirs from drums. Includes pump, drum cover, high pressure hose, outlet swivel, control valve and universal swivel, whip hose, coupler and universal follower. For use with 120 lb. drums (not included). Fill nipple is not included and must be ordered separately.

| Model No. | Bare Pump | Pump Ratio | Max. Working Pressure | Max. Air Pressure | Air Inlet | Lube Outlet | Hose |
|---|---|---|---|---|---|---|---|
| 85830 | V325120000 | 25:1 | 3750 psi<br>258 bar | 150 psi<br>10.3 bar | 3/8" NPT (female) | 1/4" NPT (female) | 3/8" ID x 10' SAE 100R2 high pressure hose (4000 psi/275 bar working pressure) |

85830
shown with drum
(not included)

## ALS Fill Pump Accessories

| Model No. | Description |
|---|---|
| 277059 | Fill nipple (long) for 203 pump |
| 277057 | Grease coupler, 3/8" NPTF (female) inlet |
| 674 | Two wheel hand cart (to make package portable) |
| 80895 | Caster base (to make package portable) |

## Quicklub Pump Accessories

638-37549-1

273921

| Model No. | Description |
|---|---|
| 638-37549-1 | Manual grease filler pump—2-liter |
| 638-37549-2 | Manual grease filler pump—4- and 8-liter and 2-liter flat type |
| 246322 | Remote push-button manual lube upgrade kit for pumps with square DIN connectors (field replacement only) |
| 256276 | Remote push-button manual lube kit for pumps with bayonet round connectors (6 wire cord) |
| 273921 | Universal quickfill adapter for 2-, 4- and 8-liter pumps |
| 538-36763-5 | Fill adapter for 4- and 8-liter pumps |
| 538-36763-4 | 90° fill adapter for 4- and 8-liter pumps |
| 538-36763-1 | Fill adapter for 2-liter pumps |
| 241052 | 7.5 Amp fuse |
| 241053 | Standard fuse holder |
| 276409 | Heavy duty fuse holder |
| 664-34195-9 | 45' 5 wire power cord (round bayonet) |

Lubricant flows through supply lines between the pump and divider valves, then through feed lines between the divider valves and the bearing. Tubing and/or pipe sizes are determined after considering both the length of the line and the specific lubricant intended for use in the system.

Your Lincoln representative can assist you in the proper selection of supply and feed line material to optimize your application.

Listed below is a simplified outline of the installation components offered. For a complete listing of products, please refer to the pages in this catalog entitled Fittings, Adapters and Accessories. Additional installation componentry can be found in the Installation Components Catalog.

**TUBING**

- Hydraulic, Steel, Stainless Steel and Nylon
- Single and Multiple Tube Clamps
- Heavy-Duty, Standard-Duty, Threaded Sleeve and Snap-On Coupler Tube Fittings
- Quicklinc™ Tubing Adapter
- Zerk-Lock™ Grease Fitting Adapters
- Non-Metallic

**PIPING**

- Seamless
- Continuous Welded
- Forged Fittings
- Malleable Iron Fittings
- 316 Stainless Steel Pipe and Fittings
- Stainless Steel Fittings
- Galvanized Pipe, Threaded Plug and Fittings

**ACCESSORIES**

- Supply, Feed and Bulk Feed Line Hose
- Air Hose
- Kits for Hose Repair
- Heavy-Duty Air Line Quick Disconnects

**AIR CONTROL AND ACCESSORIES**

- Manual Shut-Off Valves
- Pressure Gauges
- Lubricant Filters and Strainers

**AIRCARE™ AIR PREPARATION SYSTEMS**

- Modular Air Line Filters, Regulators and Lubricators
- Integrated/Modular Filter/Regulator with Gauge
- Modular Air Line Combination Units
- High-Capacity Air Line Filters, Regulators and Lubricators
- High-Capacity Air Line Combination Units
- Miniature Air Line Components—Air Line Filter, Regulator and Lubricator
- Miniature Air Line Combination Units
- Modular Air Line Equipment Accessories: Lockout Valve, Quick Clamp, Quick Clamp Wall Mounting Bracket, Porting Block, Quick Mount Pipe Adaptors, Manifold Block, Pressure Switch, Panel Nut, Wall Mount Bracket, Tamper esistant Cover and Seal Wire
- Air Line Equipment Accessories: Wall Mount Bracket, High Capacity; Mounting Bracket and Nut, Miniature; Pressure Gauges

**PIPE FITTINGS**

- Reducing Bushings
- Nipples
- Couplings
- Reducing Couplings
- Street Ells
- Tees
- Crosses
- Adapter Unions
- Elbows
- Pipe Fitting Adapters
- Supply Line Swivels
- Feed Line Swivels
- Anchor and Junction Blocks

## Divider Valve Mounting Accessories

| Model No. | Description |
|---|---|
| 246416 | Valve mounting bracket |
| 51304 | ¼" nylon locknut for valve mounting |
| 247023 | Grade 8, ¼" valve mounting bolt |
| 239499 | Template for divider valve mounting (6, 8, 10 and 12 outlet valves) |
| 252807 | Valve mounting block for welding |
| 249987 | 6mm bolt to be used with the 252807 |
| 272569 | Lock washer for valve mounting |

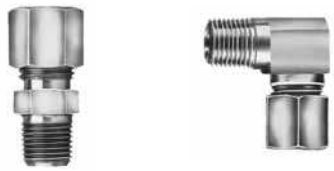

## Standard Compression Fittings for Steel or Nylon Tubing

| Model No. | Description |
|---|---|
| 241290 | ¼" tube x ⅛" NPT male straight fitting |
| 241293 | ¼" tube x ⅛" NPT male 90° fitting |

## Divider Valve Outlet Adapters for ¼" O.D. Steel or Nylon Tubing Compression-Style With Check Valve

| Model No. | Description |
|---|---|
| 68462 | Ferrule ¼" |
| 404-22602-1 | Compression nut |
| 504-31606-3 | Check valve body |
| 404-22581-2 | Ferrule |

## Divider Valve Outlet Adapters for ¼" O.D. Steel or Nylon Tubing Compression-Style Without Check Valve

| Model No. | Description |
|---|---|
| 404-20236-4 | Compression nut |
| 404-23668-1 | Compression nut (stainless steel) |
| 404-22581-2 | Ferrule |

## Divider Valve Outlet Adapters for ⅛" I.D. Hose

| Model No. | Description |
|---|---|
| 404-22581-2 | Ferrule |
| 239857 | Valve outlet adapter with check (⅛" NPT female) |
| 239959 | Valve outlet adapter without check (⅛" NPT female) |

## For SSVM Valves—Compression Fitting

| Model No. | Description | Material | Feed Line Connection |
|---|---|---|---|
| 13112 | Compression nut | Brass | ⅛" Steel or Nylon Tube |
| 419-22990-1 | Adapter | | |
| 419-22618-2 | Ferrule | | |
| 519-30583-1 | Check valve body | | |

**NOTE:** Quicklub® adapters without check valves are for use in oil systems with open tube (minimal backpressure). Quicklub adapters with check valves are for use in all automated systems.

## Zerk-Lock™ and Quicklinc® Make Connecting Fast

Quicklinc line connectors and adapters link metering valves and flexible lubrication lines. Outlet adapters with check valves are used in automated systems, while models without a check valve are used in manual systems—called single point kits—where a divider valve connected to several lubrication points is fed with a grease gun.

The Quicklinc tube splicer union is a great way to fix a broken line without replacing the whole line. Just clean the line ends, plug them into the connector and the line's repaired.

Quicklinc lube point connectors are ideal when fittings can be removed easily. All three varieties—straight, 90-degree elbow and elbow swivel—connect much faster than using a typical screw connector, which requires assembly of four components.

Zerk-Lock is Lincoln's other great time-saving connector. When removing a fitting is not practical, the Zerk-Lock grease fitting adapter is the answer. It connects any 1⁄8-inch male tube adapter directly to a grease fitting. Even when a fitting is self-tapered or pressed in, there's no need to drill it out and tap new threads with Zerk-Lock—a tremendous time saving.

Quicklinc and Zerk-Lock are designed to work well together. It's as simple as:

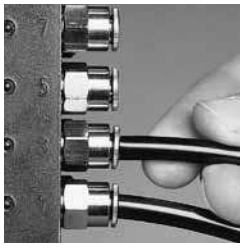

1. Install a Quicklinc into the divider valve and insert the line

2. Place a Zerk-Lock onto the fitting

3. Seal and tighten Zerk-Lock using a hammer and staking tool

4. Then thread a Quicklinc completely into the Zerk-Lock

5. And plug the tube into the Quicklinc adapter

## Quicklinc Push-In Style Fittings for Nylon Tubing

| Model No. | Description |
|---|---|
| 244047 | ¼" tube x ⅛" NPT male straight fitting |
| 244048 | ¼" tube x ⅛" NPT male 90° fitting |
| 243699 | ¼" tube x ⅛" NPT male 90° swivel fitting |
| 244053 | ¼" tube x ¼ -28 male 90° swivel fitting |
| 244054 | ¼" tube x ¼ -28 male 90° fitting |
| 244055 | ¼" tube x ¼ -28 male straight fitting |
| 244056 | ¼" tube x 6x1 mm male 90° fitting |
| 244057 | ¼" tube x 6x1 mm straight fitting |
| 244058 | ¼" tube x ¼" tube splicer union |

## Divider Valve Outlet Adapters for ¼" O.D. Nylon Tubing Quicklinc Push-In Style

| Model No. | Description |
|---|---|
| 244883 | Valve outlet fitting with check M10x1 thread |
| 244884 | Valve outlet fitting without check M10x1 thread |

## Divider Valve Outlet & Inlet Adapters for ⅛" I.D. Hose Quicklinc Push-In Style with Check

| Model No. | Description |
|---|---|
| 272658 | Valve outlet fitting with check. Use with 272401 and 272394 hose stud. M10x1 thread |
| 272659 | ⅛" NPT male straight fitting. Use with 272401 and 272394 hose stud. |

IMPORTANT: Use the valve adapters for connecting the ⅛" high pressure hose (incl. hose stud with groove) to the main divider valve. The collet of the adapter is not knurled and has a wide collar.

| Model No. | Description |
|---|---|
| 432-24313-1 | Protective Quicklinc rubber boot |

## Divider Valve Outlet Closure Plug

| Model No. | Description |
|---|---|
| 303-17499-3 | Valve outlet closure plug (gasket not required) |
| 303-19346-2 | Stainless steel outlet closure plug (gasket not required) |

## ⅛" Supply and Feed Line Hose

| Min. Burst | Lube Working Pressure | Nominal Size | | Minimum Bending Radius | Construction | Temp. |
|---|---|---|---|---|---|---|
| | | ID | OD | | | |
| 10,000 psig 690 bar | 4000 psig 276 bar | ⅛" | 5⁄16" | 3½" | Nylon Tube Dacron Braid Polyurethane Cover | -40°F to +212°F |

| Model No. | Description (⅛" ID hose) |
|---|---|
| 241286 | 26 ft. (7.92 m) coil grease filled |
| 241287 | 35 ft. (10.66 m) coil grease filled |
| 241288 | 40 ft. (12.19 m) coil grease filled |
| 252717 | 200 ft (60.96 m) coil non-grease filled |
| 277226 | 2250 ft. (685.8 m) spool non-grease filled |
| 276395 | 40 ft. (12.19 m) grease filled with quick wrap protection installed on hose |

## Hose Ends for Use with Quicklinc Fittings for ⅛" ID Hose

| Model No. | Description |
|---|---|
| 272394 | Hose stud, 90° (to be used with 272427) |
| 272401 | Hose stud, straight (to be used with 272427) |
| 272427 | Threaded sleeve |
| 274238 | Stainless steel hose stud sleeve |
| 274239 | Stainless steel straight hose |

## Hose Ends for ⅛" I.D. Hose

| Model No. | Description |
|---|---|
| 241289 | ⅛" NPT swedge on hose stud (Requires swedging tool) |
| 246002 | ⅛" NPT field installable hose coupling (swedging tool not required) |
| 276954 | ⅛" NPT swedge on hose fitting with swivel (requires swedging tool) |

## Hose End Connecting Tools

| Model No. | Description |
|---|---|
| 241238 | Hose Swedging Tool |
| 274062 | Hand vise for quick connect and reusable hose ends |

## Feed Line Nylon Tubing

| Model No. | Description | O.D. In. | Wall Thickness in. / mm | Working Pressure | | Minimum Bending Radius | Temp. |
|---|---|---|---|---|---|---|---|
| | | | | psig | bar | | |
| 242025 | 25 ft./7.6 m coil grease filled | ¼" black | .050 / 1.27 | 625 | 42.5 | .875 / 22.2 | -65°F to +150°F |
| 242050 | 50 ft./15.2 m coil grease filled | | | | | | |
| 62357 | 100 ft./30.5 m coil non-grease filled | | | | | | |
| 247022 | 500 ft./152.40 m coil non-grease filled | | | | | | |
| 274047 | 25 ft./7.6 m coil grease filled | ¼" grey | .062 / 1.575 | 500 | 34.5 | 0.5 / 12.7 | -65°F to +200°F |
| 274048 | 50 ft./15.2 m coil grease filled | | | | | | |
| 274049 | 100 ft./30.5 m coil non-grease filled | | | | | | |
| 274050 | 500 ft./152.4 m coil non-grease filled | | | | | | |

**NOTE:** Burst pressure 2500 psi (172 bar)

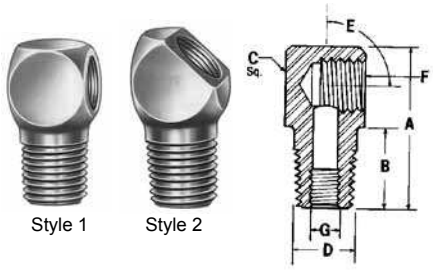


Style 1 Style 2

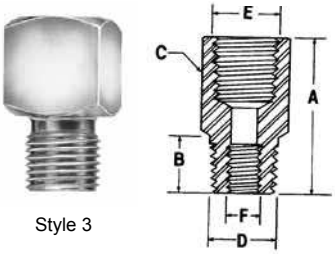


Style 3

## Pipe Thread Adapters

| Model No. | Style | A | B | C | D | E | F |
|---|---|---|---|---|---|---|---|
| 13129 | 1 | 1½ | ⅞ | ⅝ | ⅛ NPTF | 90° | ⅛ NPTF |
| 20024 | 3 | ⅞ | 5⁄16 | ½ hex | ¼-28 Taper | ⅛ NPSF | — |
| 20026 | 1 | 13⁄16 | 5⁄16 | ½ sq. | ¼-28 Taper | 90° | ⅛ PTF |
| 20028 | 2 | 1 | 15⁄32 | ½ sq. | ⅛ PTF | 45° | ⅛ PTF |
| 20029 | 1 | 1 | 15⁄32 | ½ sq. | ⅛ PTF | 90° | ⅛ PTF |
| 247616 | 2 | 1 | 17⁄32 | ½ sq. | ¼-28 Taper | 45° | ⅛ PTF |
| 276631 | 1 | 1 | ⅝ | ½ sq. | ¼-28 Taper | 90° | ⅛ NPTF |
| 20012 | 1 | 1 5⁄16 | ⅝ | 11⁄16 sq. | ¼ NPT | 90° | ¼ NPT |

## Steel Tubing

| Model No. | Size (O.D. x Wall) | | | Working Pressure | Type |
|---|---|---|---|---|---|
| | O.D. | Wall | Length | | |
| 62175 | ⅛ | .020" | 25 ft/7.6 m | 4400 psig / 300 bar | Coil |

## Nylon Tubing

| Model No. | Size (O.D. x Wall) | | | Working Pressure | Minimum Bending Radius |
|---|---|---|---|---|---|
| | O.D. | Wall | Length | | |
| 62256 | ⅛" | .026" | 25 ft/7.6 m | 625 psig / 42.5 bar | .375" |
| 62278 | | | 100 ft/30.5 m | | |
| 62956 | | | 500 ft/152 m | | |

## Grease Fittings

| Model No. | Description |
|---|---|
| 700506 | ⅛" NPT threaded straight leakproof fitting |
| 242125 | Plastic grease fitting cap |

## Fittings, Adapters and Installation Accessories

| Model No. | Description |
|---|---|
| 10130 | ⅛" NPT male x ⅛" NPT male nipple |
| 10181 | ⅛" NPT male x ⅛" NPT female adapter, 1⅞" long |
| 10182 | ⅛" NPT male x ⅛" female adapter, 15⁄16" long |
| 14562 | 2 outlet ⅛" NPT x ⅛" NPT junction block |
| 14563 | 4 outlet ⅛" NPT x ⅛" NPT junction block |
| 81583 | Junction Block, ⅛" NPT |
| 14570 | Anchor block |
| 276407 | ⅛" NPT male x ⅛" NPT female x ⅛" NPT female |
| 10461 | ¼" NPT male x ⅛" NPT female reducing bushing |

Style 1

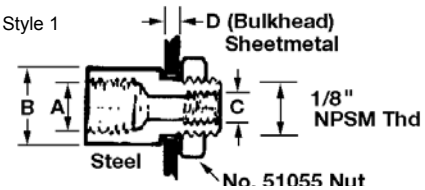


Style 2

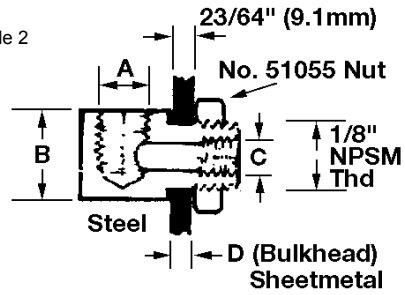


## Bulkhead Adapters

| Model No. | Style | A | B | C | D |
|---|---|---|---|---|---|
| 13154 | 1 | ⅛" PTF | ½" / 12.7 mm | ¼" -28 | 3⁄16" / 4.8 mm |
| 14054 | 1 | ⅛" PTF | ½" / 12.7 mm | ¼" -28 | ¼" / 6.4 mm |
| 13155 | 2 | ⅛" PTF | ½" / 12.7 mm | ¼" -28 | 3⁄16" / 4.8 mm |
| 244225 | 1 | ⅛" NPT | ⅞" hex | ⅛" NPT | ⅞" |
| 51055 | ⅛" N.P.S.M. thread | | | | |

No. 51055

## Metric Adapters*

| Model No. | Description |
|---|---|
| 20042 | M6X1 male x ⅛" NPSF female straight |
| 20043 | M6X1 male x ⅛" NPSF female 90° |
| 244201 | ⅛" BSPT male x ⅛" NPT female thread |
| 304-19166-1 | M6X1 male x ¼" - 28 SAE female |
| 304-19165-1 | M8X1 male x ¼" - 28 SAE female |
| 304-19164-1 | M10X1 male x ¼" - 28 SAE female |
| 241650 | ⅛" BSPT male x ⅛" NPT female thread - stainless steel |
| 273482 | M8X1 male x ⅛" NPT female straight |
| 277307 | M8X1 female x M8X1.25 male 90° |

* Contact Lincoln for a complete metric Quicklub catalog.

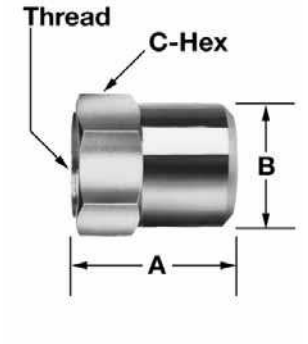


## Zerk-Lock™ Grease Fitting Adapter

Connects any ⅛" NPTF male tube adapter directly to a standard grease fitting. Aluminum, carbon steel construction; fluorocarbon elastomer seal.

| Model No. | Thread | Dimensions | | |
|---|---|---|---|---|
| | | A in./mm | B in./mm | C-Hex in. / mm |
| 270784 | ⅛" NPSL Female | .625 / 15.9 | .500 / 12.7 | .500 / 12.7 |

**Note:**
Zerk-Lock, with a straight female thread, is designed to accept a tube connector with a tapered male thread. This tapered to straight thread engagement is required for secure seal.

| Model No. | Description |
|---|---|
| 247615 | Staking tool for the 270784 Zerk Lock fitting |

## Swivels

| Model No. | Description |
|---|---|
| 91048 | ⅛" NPT male x ⅛" NPT female 90° swivel |
| 91308 | ⅛" NPT male x ⅛" NPT female straight swivel |

## Street Tee

| Model No. | Description |
|---|---|
| 276407 | ⅛" NPT male x ⅛" NPT female x ⅛" NPT female |

## Adapter Unions

| Model No. | Description |
|---|---|
| 66649 | ⅛" NPT male x ⅛" NPT female swivel adapter union |

## Installation/Assembly Tools

| Model No. | Description |
|---|---|
| 226-12508-5 | Plastic Tube & Hose Cutter |
| 226-13095-7 | Replacement Blade |
| 241238 | Hose Swedging Tool |
| 274062 | Hand vise for quick connect and reusable hose ends |
| 532-31847-1 | Tool for Loosening Quickline-Type Fittings |
| 276424 | Quicklub Spare Parts Kit |

## Quick Wrap for Line Bundling and Protection

Quick split wrap makes bundling and protecting lube lines fast. It's as simple as:

1. Place installation tool around group of lines

2. Slide Quick Wrap onto line bundle

| Model No. | Description | Installation Tool Required | Approx. Number of ¼" Tube | Approx. Number of ⅛" ID Hose |
|---|---|---|---|---|
| 276389 | ⅝" Quick Wrap (164' roll) | 276634 | 2 - 5 | 2 - 3 |
| 276390 | ¾" Quick Wrap (100' roll) | 276634 | 5 - 7 | 3 - 4 |
| 276391 | 1" Quick Wrap (65' roll) | 276635 | 7+ | 4+ |

## System Finishing Accessories

| Model No. | Description |
|---|---|
| 241110 | Feed line bundling spiral wrap (10 ft. / 3 m length) |
| 241120 | Feed line bundling spiral wrap (20 feet/6m of spiral wrap) |
| 276693 | 300 feet of spiral wrap |
| 241055 | Nylon ties (50 count poly bag) 7" / 177.8 m length |
| 241054 | Nylon ties (100 count poly bag) 7" / 177.8 m length |
| 274097 | 20 feet/6m of ⅜" convoluted loom/split wrap |
| 274098 | 20 feet/6m of ½" convoluted loom/split wrap |
| 274099 | 20 feet/6m of ⅝" convoluted loom/split wrap |

## Pump Mounting Bracket and Hardware for 203 Series and QLS 300 & 400 Series Pumps

| Model No. | Description |
|---|---|
| 249520 | Pump mounting bracket for 203/301/401/653 Series pumps |
| 249209 | 12 mm x 1½" long grade 8 bolt for 249520 pump bracket (2 required) |
| 274820 | Pump and primary valve mounting bracket |

## Stand Offs for Mounting SSV Valves, P-Clamps and Angle Iron

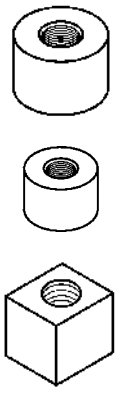

| Model No. | Description |
|---|---|
| 252807 | Valve mounting block for welding |
| 249987 | 6mm bolt to be used with the 252807 |
| 249850 | 12mm round stand off |
| 270928 | 12mm square stand off |
| 249848 | 12mm x ⅝" long bolt to be used with 249850 and 270928 |
| 249851 | 10mm round stand off |
| 249849 | 10mm x ⅝" long bolt to be used with 249851 |

These kits are designed to service up to 12 points from a single grease fitting utilizing our 12-point SSV series divider valve. The kits, which are available with or without a grease gun, include all componentry required to install the system. Kits are available primed with NLGI #2 grease or non-filled if a specific grade or type of grease is to be used.

These kits effectively replace the concept of using grease fittings mounted to a central manifold with a system that delivers precise amounts of lubricant, fully monitored with the divider valve's indicator pin. Kits include 100' ¼" nylon tubing, 12 straight Quicklinc® tube fittings, 12 Zerk-Lock™ adapters, mounting clips and hardware.

## Quicklub Centralized Lubrication Kits

Single point kits contain all items required to install a system on your machinery, including a complete installation/service manual. The selection chart describes the models available to meet your specific needs.

| Model No. | Selection Chart Description | Tubing |
|---|---|---|
| 87311 | Kit with single fitting for use with portable grease gun. | Non-filled |
| 87312 | | Pre-filled |
| 87412 | Complete kit with grease gun for permanent mounting. | Pre-filled |

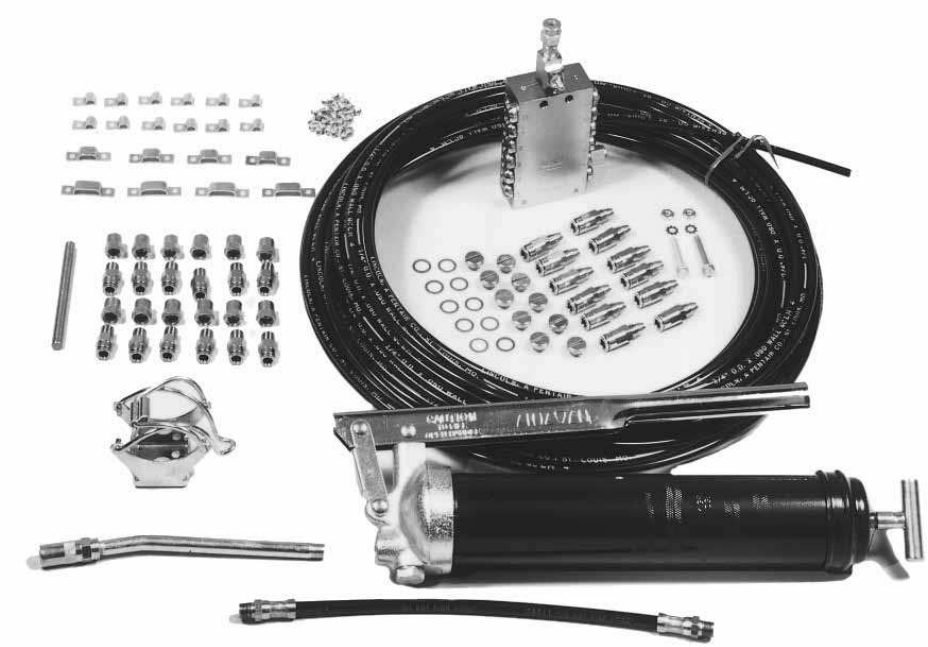

## Trailer Kits—Unassembled

| Model No. | Description |
|---|---|
| 239406 | 6-point manual QL kit |
| 239408 | 8-point manual QL kit |
| 239410 | 10-point manual QL kit |
| 239412 | 12-point manual QL kit |
| 239418 | 18-point manual QL kit |

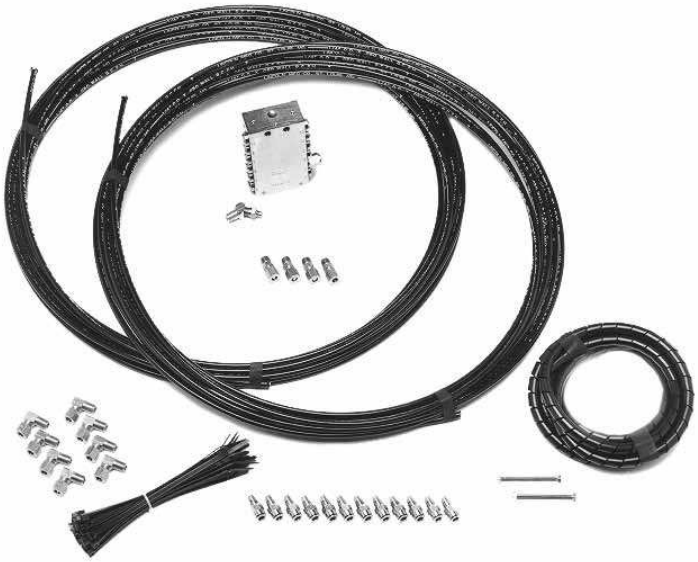

## Trailer Kits—Preassembled

| Model No. | Description |
|---|---|
| 244512 | 12-point manual QL kit—tandem axle |

**Note:** Above referenced kits require purchase of electric grease pump (see Pump section of this catalog) when fully automated system is desired.

## Tractor/Truck Kits
## Unassembled Kits

| Description | Manual Kits | Automated Kits |
|---|---|---|
| 24-point QL kit | 241324 | 241124 (includes 241324 and 94012) |
| 28-point QL kit | 241328 | 241128 (includes 241328 and 94012) |
| 32-point QL kit | 241332 | 241132 (includes 241332 and 94012) |
| 33-point QL kit | 241333 | 241133 (includes 241333 and 94012) |

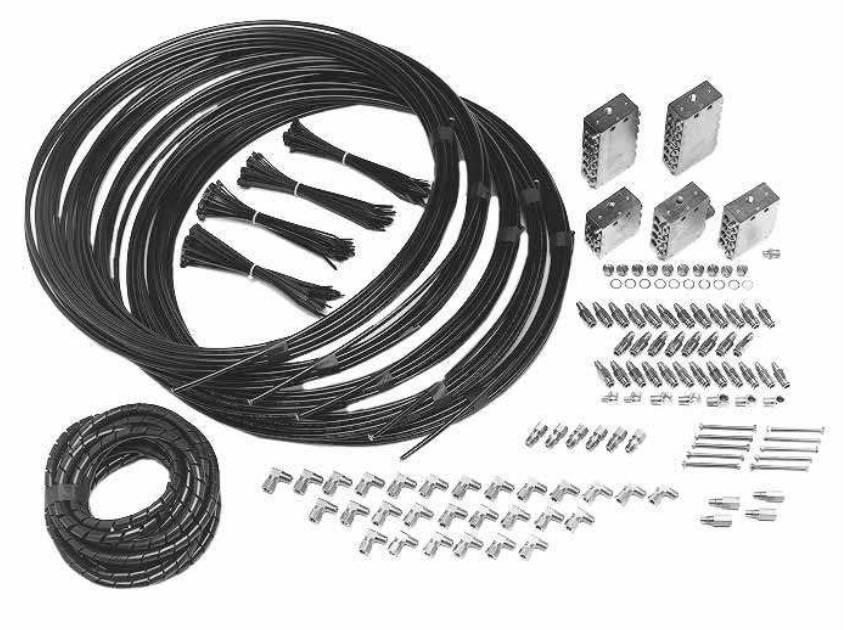

## Preassembled Manual Kits

| Model No. | Description |
|---|---|
| 247232 | 32-point manual preassembled kit |

**Note:** Above referenced kits require purchase of electric grease pump (see Pump section of this catalog) when fully automated system is desired.

| Model No. | Page No. |
|---|---|
| 674 | 24 |
| 10130 | 29 |
| 10181 | 29 |
| 10182 | 29 |
| 10461 | 29 |
| 13112 | 26 |
| 13129 | 29 |
| 13154 | 29 |
| 13155 | 29 |
| 14054 | 29 |
| 14562 | 29 |
| 14563 | 29 |
| 14570 | 29 |
| 20012 | 29 |
| 20024 | 29 |
| 20026 | 29 |
| 20028 | 29 |
| 20029 | 29 |
| 20042 | 30 |
| 20043 | 30 |
| 226-12508-5 | 30 |
| 226-13095-7 | 30 |
| 226-14105-5 | 23 |
| 236-10580-1 | 23 |
| 236-14261-9 | 23 |
| 237-13381-2 | 23 |
| 237-13381-3 | 23 |
| 239406 | 33 |
| 239408 | 33 |
| 239410 | 33 |
| 239412 | 33 |
| 239418 | 33 |
| 239499 | 26 |
| 239857 | 26 |
| 239959 | 26 |
| 241052 | 24 |
| 241053 | 24 |
| 241054 | 31 |
| 241055 | 31 |
| 241110 | 31 |
| 241116 | 34 |
| 241120 | 31 |
| 241124 | 34 |
| 241128 | 34 |
| 241129 | 34 |
| 241132 | 34 |
| 241133 | 34 |
| 241238 | 28, 30 |
| 241286 | 28 |
| 241287 | 28 |
| 241288 | 28 |
| 241289 | 28 |
| 241290 | 26 |
| 241293 | 26 |
| 241324 | 34 |
| 241328 | 34 |
| 241332 | 34 |
| 241333 | 34 |
| 241650 | 4, 30 |
| 242025 | 28 |
| 242050 | 28 |
| 242125 | 29 |
| 243699 | 27 |
| 244047 | 27 |
| 244048 | 27 |
| 244053 | 27 |
| 244054 | 27 |
| 244055 | 27 |
| 244056 | 27 |
| 244057 | 27 |
| 244058 | 27 |
| 244201 | 30 |
| 244225 | 29 |
| 244512 | 33 |
| 244883 | 27 |
| 244884 | 27 |
| 246002 | 28 |
| 246322 | 24 |
| 246416 | 26 |
| 247022 | 28 |
| 247023 | 26 |
| 247232 | 34 |
| 247615 | 30 |
| 247616 | 29 |
| 249010 | 4 |
| 249209 | 31 |
| 249520 | 31 |
| 249848 | 31 |
| 249849 | 31 |
| 249850 | 31 |
| 249851 | 31 |
| 249987 | 26, 31 |
| 252717 | 28 |
| 252807 | 26, 31 |
| 256276 | 24 |
| 270784 | 30 |
| 270864 | 8, 23 |
| 270928 | 31 |
| 271374 | 23 |
| 271924 | 22 |
| 271925 | 22 |
| 271926 | 22 |
| 271927 | 22 |
| 272394 | 27, 28 |
| 272401 | 27, 28 |
| 272427 | 28 |
| 272569 | 26 |
| 272632 | 23 |
| 272633 | 23 |
| 272634 | 23 |
| 272643 | 23 |
| 272658 | 27 |
| 272659 | 27 |
| 273422 | 23 |
| 273425 | 23 |
| 273426 | 23 |
| 273482 | 30 |
| 273921 | 24 |
| 274047 | 28 |
| 274048 | 28 |
| 274049 | 28 |
| 274050 | 28 |
| 274062 | 28, 30 |
| 274097 | 31 |
| 274098 | 31 |
| 274099 | 31 |
| 274149 | 23 |
| 274238 | 28 |
| 274239 | 28 |
| 274820 | 31 |
| 274847 | 23 |
| 276389 | 31 |
| 276390 | 31 |
| 276391 | 31 |
| 276395 | 28 |
| 276407 | 29, 30 |
| 276409 | 24 |
| 276424 | 30 |
| 276631 | 29 |
| 276634 | 31 |
| 276635 | 31 |
| 276693 | 31 |
| 276954 | 28 |
| 277057 | 24 |
| 277059 | 24 |
| 277226 | 28 |
| 277307 | 30 |
| 303-16118-1 | 6 |
| 303-16119-1 | 6 |
| 303-16120-1 | 6 |
| 303-16121-1 | 6 |
| 303-16122-1 | 6 |
| 303-16123-1 | 6 |
| 303-16124-1 | 6 |
| 303-16125-1 | 6 |
| 303-16126-1 | 6 |
| 303-16127-1 | 6 |
| 303-17499-3 | 28 |
| 303-19346-2 | 28 |
| 304-19164-1 | 30 |
| 304-19165-1 | 30 |
| 304-19166-1 | 30 |
| 304-19614-1 | 9, 23 |
| 404-20236-4 | 26 |
| 404-22581-2 | 26 |
| 404-22602-1 | 26 |
| 404-23668-1 | 26 |
| 419-22618-2 | 26 |
| 419-22990-1 | 26 |
| 432-24313-1 | 27 |
| 444-70490-1 | 14 |
| 444-70491-1 | 14 |
| 504-31606-3 | 26 |
| 51055 | 29 |
| 51304 | 26 |
| 519-30583-1 | 26 |
| 519-34271-2 | 23 |
| 519-34271-7 | 23 |
| 519-34271-8 | 23 |
| 519-34339-3 | 23 |
| 519-34339-4 | 23 |
| 532-31847-1 | 30 |
| 538-36763-1 | 24 |
| 538-36763-4 | 24 |
| 538-36763-5 | 24 |
| 544-32022-1 | 14 |
| 544-32023-1 | 14 |
| 544-32695-1 | 14 |
| 544-32696-1 | 14 |
| 544-32957-2 | 14 |
| 549-34254-1 | 6 |
| 549-34254-2 | 6 |
| 549-34254-3 | 6 |
| 549-34254-4 | 6 |
| 549-34254-5 | 6 |
| 549-34254-6 | 6 |
| 549-34254-7 | 6 |
| 549-34254-8 | 6 |
| 549-34254-9 | 6 |
| 549-34255-1 | 6 |
| 600-26875-2 | 24 |
| 600-26876-2 | 8 |
| 600-26876-2 | 24 |
| 600-26877-2 | 24 |
| 600-28750-1 | 23, 24 |
| 600-29110-1 | 24 |
| 600-29185-1 | 24 |
| 600-29304-1 | 24 |
| 619-26396-2 | 4 |
| 619-26398-2 | 4 |
| 619-26646-2 | 4 |
| 619-26648-2 | 4 |
| 619-26650-1 | 5 |
| 619-26651-3 | 5 |
| 619-26653-1 | 5 |
| 619-26654-3 | 5 |

| Model No. | Page No. |
|---|---|
| 619-26764-1 | 5 |
| 619-26765-3 | 5 |
| 619-26844-1 | 4 |
| 619-26845-2 | 4 |
| 619-26848-1 | 5 |
| 619-26849-2 | 5 |
| 619-27121-1 | 4 |
| 619-27122-1 | 4 |
| 619-27472-1 | 4 |
| 619-27474-1 | 4 |
| 619-27476-1 | 4 |
| 619-27478-1 | 4 |
| 619-28899-1 | 4 |
| 619-28900-1 | 4 |
| 619-28901-1 | 4 |
| 619-28902-1 | 4 |
| 619-29067-1 | 4 |
| 619-29400-1 | 4 |
| 619-29401-1 | 4 |
| 619-36732-1 | 5 |
| 619-36732-2 | 5 |
| 619-77254-1 | 4 |
| 62175 | 29 |
| 62256 | 29 |
| 62278 | 29 |
| 62357 | 28 |
| 624-28894-1 | 23 |
| 624-28895-1 | 23 |
| 624-28931-1 | 23 |
| 62956 | 29 |
| 638-37549-1 | 24 |
| 638-37549-2 | 24 |
| 644-40821-6 | 9 |
| 644-40822-8 | 9 |
| 644-40824-1 | 13 |
| 644-40824-2 | 13 |
| 644-40826-1 | 13 |
| 644-40827-1 | 13 |
| 644-40843-8 | 9 |
| 644-40867-1 | 13 |
| 644-40868-1 | 13 |
| 644-40869-1 | 13 |
| 644-40870-1 | 13 |
| 644-40873-1 | 9 |
| 644-40987-2 | 9 |
| 644-41040-1 | 13 |
| 644-46073-5 | 11 |
| 644-46073-6 | 11 |
| 644-46173-4 | 11 |
| 644-46173-5 | 11 |
| 644-46173-6 | 11 |
| 644-46173-7 | 11 |
| 644-46173-8 | 11 |
| 644-46174-2 | 11 |
| 644-46174-4 | 11 |
| 644-46278-1 | 8 |
| 644-46278-3 | 8 |
| 649-29535-1 | 6 |
| 649-29536-1 | 6 |
| 649-29537-1 | 6 |
| 649-29538-1 | 6 |
| 649-29539-1 | 6 |
| 649-29540-1 | 7 |
| 649-29541-1 | 7 |
| 649-29542-1 | 7 |
| 649-29543-1 | 7 |
| 649-29544-1 | 7 |
| 649-29545-1 | 6 |
| 649-29546-1 | 6 |
| 649-29547-1 | 6 |
| 649-29548-1 | 6 |
| 649-29549-1 | 6 |
| 649-29550-1 | 7 |
| 649-29551-1 | 7 |
| 649-29552-1 | 7 |
| 649-29553-1 | 7 |
| 649-29554-1 | 7 |
| 649-29627-1 | 6 |
| 649-29628-1 | 6 |
| 649-29629-1 | 6 |
| 649-29630-1 | 6 |
| 649-29631-1 | 7 |
| 649-29632-1 | 7 |
| 649-29633-1 | 7 |
| 649-29634-1 | 7 |
| 649-29635-1 | 6 |
| 649-29636-1 | 6 |
| 649-29637-1 | 6 |
| 649-29638-1 | 6 |
| 649-29639-1 | 7 |
| 649-29640-1 | 7 |
| 649-29641-1 | 7 |
| 649-29642-1 | 7 |
| 650-40765-4 | 20 |
| 650-40768-3 | 20 |
| 650-40768-4 | 20 |
| 650-40768-5 | 20 |
| 650-40915-8 | 16 |
| 650-40915-9 | 16 |
| 655-28716-1 | 24 |
| 664-34005-5 | 23 |
| 664-34005-6 | 23 |
| 664-34195-9 | 24 |
| 664-36070-5 | 23 |
| 664-36070-6 | 23 |
| 66649 | 30 |
| 68462 | 26 |
| 700506 | 29 |
| 80895 | 24 |
| 81583 | 29 |
| 85414 | 22 |
| 85424 | 22 |
| 85425 | 22 |
| 85429 | 22 |
| 87311 | 32 |
| 87312 | 32 |
| 87412 | 32 |
| 85830 | 24 |
| 91048 | 30 |
| 91308 | 30 |
| 94012 | 8 |
| 94024 | 8 |
| 94212 | 8 |
| 94222 | 9 |
| 94223-12 | 10 |
| 94223-AC | 10 |
| 94223 | 10 |
| 94224 | 8 |
| 94412 | 8 |
| 94412LDL | 8 |
| 94422 | 9 |
| 94423-12 | 10 |
| 94423-AC | 10 |
| 94423 | 10 |
| 94423LDL | 10 |
| 94424 | 8 |
| 94434LDL | 13 |
| 94812 | 8 |
| 94812LDL | 8 |
| 94822 | 9 |
| 94822LDL | 9 |
| 94823 | 10 |
| 94823-12 | 10 |
| 94823-AC | 10 |
| 94823LDL | 10 |
| 94824 | 8 |
| 94824LDL | 8 |
| 94834LDL | 13 |
| 94923 | 10 |
| P301 31211154 | 18 |
| P301 31411110 | 20 |
| P301 31411154 | 18 |
| P301 42611114 | 18 |
| P301 42811114 | 18 |
| P301 61211154 | 18 |
| P301 61411154 | 18 |
| P301 62611114 | 18 |
| P301 62811114 | 18 |
| P301 91211154 | 18 |
| P301 91411154 | 18 |
| P301 92611114 | 18 |
| P301 92811114 | 18 |
| P311 31211154 | 19 |
| P311 31411110 | 20 |
| P311 31411154 | 19 |
| P311 42611114 | 19 |
| P311 42811114 | 19 |
| P311 61211154 | 19 |
| P311 61411110 | 20 |
| P311 61411154 | 19 |
| P311 62611114 | 19 |
| P311 62811114 | 19 |
| P311 91211154 | 19 |
| P311 91411154 | 19 |
| P311 92611114 | 19 |
| P311 92811114 | 19 |
| P401 31202574 | 15 |
| P401 31401110 | 16 |
| P401 31402574 | 15 |
| P401 42601114 | 15 |
| P401 42801114 | 15 |
| P401 61202574 | 15 |
| P401 61401110 | 16 |
| P401 61402574 | 15 |
| P401 62601114 | 15 |
| P401 62801114 | 15 |
| P401 91202574 | 15 |
| P401 91401110 | 16 |
| P401 91402574 | 15 |
| P401 92601114 | 15 |
| P401 92801114 | 15 |
| P421 61202531 | 21 |
| P421 61222531 | 21 |
| P421 91202531 | 21 |
| P421 91402531 | 21 |
| V325120000 | 24 |

# A complete line of lubrication solutions and industrial pumping products

**Automatic lubrication**
Our automatic systems dispense measured amounts of lubricant at predetermined intervals. Systems include Helios and Duo-Matic™ two-line systems, and Centro-Matic, Modular Lube, Quicklub and ORSCO precision oil lubrication. With our BearingSaver program, we find the best automatic solution for you from our wide range of systems for grease, fluid grease and oil.

**General lubrication**
Sometimes a simple approach is the best solution. Our wide range of products includes smaller, self-contained automatic lubricators and general lubrication equipment.

**Industrial pumping**
Lincoln has developed specialized pumps and pumping stations to handle the difficult job of transferring thick fluids. From the industry-best PileDriver III and PowerMaster III pumps and air motors to specialty pumps, controls and mounting accessories, Lincoln is the preferred pumping system for many tough applications.

® SKF is a registered trademark of the SKF Group.

® Lincoln, Quicklub, Quicklinc, BearingSaver, Helios, Centro-Matic, Modular Lube, PileDriver III and PowerMaster III are registered trademarks of Lincoln Industrial Corp.

© SKF Group 2014
The contents of this publication are the copyright of the publisher and may not be reproduced (even extracts) unless prior written permission is granted. Every care has been taken to ensure the accuracy of the information contained in this publication but no liability can be accepted for any loss or damage whether direct, indirect or consequential arising out of the use of the information contained herein.

December 2014 · **FORM 442833**

skf.com