Lincoln Modular Lube automatic lubrication systems

LINCOLN

People, capabilities and systems to save money and increase productivity

We're the largest and most successful company in our field because we continually satisfy our customers with the world's best lubrication and pumping systems. For more than a century, companies have relied on our technical and quality leadership, our world-class manufacturing and customer service, and our vast network of distributors and support facilities.

Lincoln develops new products and systems at research and development facilities in the U.S., Germany and India that provide global and regional application solutions.

We have solutions for large processing plants, automotive manufacturing, pulp and paper mills, and food and beverage facilities. Virtually every industrial professional involved in operations and maintenance can benefit from Lincoln systems.

On the road or in the field, Lincoln protects heavy equipment used in mining, construction, agriculture and over-the-road trucking. The world's leading manufacturers offer our systems as standard equipment or factory options.

Lincoln builds precision metal components, state-of-the-art electronic controls, and the industry's top-performing pump systems. Our quality systems in the United States and Germany are ISO 9001 registered.

With five technical support centers on three continents, and a network of systems houses and distributors supported by regional sales and service offices, our customers can always draw on our worldwide resources.

To make sure your investment results in significant savings, Lincoln developed a unique program called BearingSaver. You not only get a complete audit of your facility, you also receive an analysis of your return on investment.

LINCOLN

SKF

Table of Contents

Introduction to Modular Lube® 2

UV Divider Valves 4

MC²-HP Divider Valves 5

XL Divider Valves 6

UV, XL and MC²-HP Divider Valve Accessories 7

Divider Valve Accessories 8

Installation Components 10

Introduction to Pumps 11

Pneumatic Modular Pumps 12

Hydraulic Modular Pumps 12

Baseplates and Reservoirs 13

Modular Pump Accessories 14

Modular LP Pumps 15

Reciprocating Pumps 16

MCLP Pumps 17

Pump Accessories 19

Pump to Point Lubricators 20

Pump to Point Lubricator Accessories 23

System Controls 24

Numerical Index 27

Built-in design options
When new technology calls for design alterations, the system designer can add or delete lubrication points without disturbing existing piping.

It's an economical system
Lincoln's Modular Lube single-line progressive system requires less piping and lower tubing costs at installation—and costs less to maintain or change when the need arises.

Patented by-pass block
This unique feature enables design engineers to extend any Lincoln Modular Lube system simply by removing the by-pass block and replacing it with a metering valve. When new machine accessories are added, Modular Lube stands ready to service any bearing point requirements.

Central Signaling
If a malfunction should occur due to a broken air line, low lubricant level, high pressure or line blockage, Lincoln's Modular Lube automatic lube system controls can be configured to signal the operator with a visual or audible alarm, and interlock contacts activate a machine shut-down circuit.

Plug-in concept
The Lincoln modular concept allows faster and easier changing of metering valve sizes. Modular pumps, reservoirs and timers make up a compact easy-to-mount lube system, simplifying the work of system designers and maintenance engineers.

Versatile interchangeable components
Divider valves, pumps reservoirs and controls can be used to tailor a Lincoln Modular Lube system to suit individual needs and/or requirements. Inventory costs are reduced to a minimum by purchasing modular components.

You're assured of positive stall
If a lubricating line plugs, any progressive lube system should shut down entirely—that's what it's designed to do. However, when a feed line becomes plugged on some systems, system pressure can cause lubrication to gradually slip by a valve piston, allowing the system to resume functioning—with one or more lubricating lines out of operation. Machinery bearings could run dry with disastrous results. Modular Lube has the closest piston-to-valve tolerances in the industry, virtually assuring you a positive stall every time.

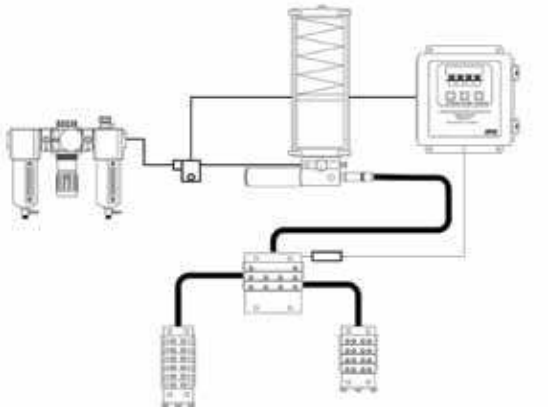

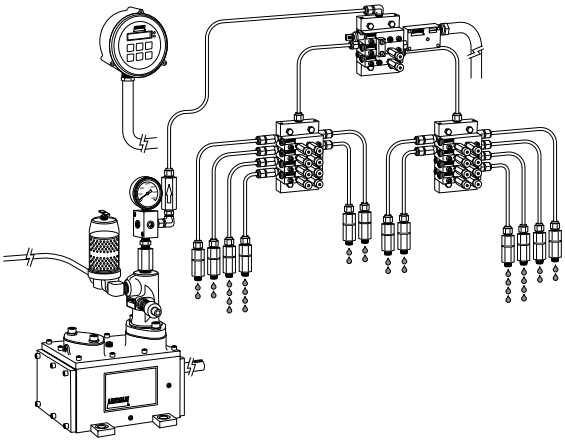

UV, XL Series
Designed for standard industrial applications. UV and XL Modular Lube systems are fully automatic, centralized lubrication systems for use on all types of industrial machinery.

Type UV and XL are available in several divider valve sizes and outputs, and provides maximum flexibility in application. This is the most versatile of the Modular Lube systems. It can be installed on all machine tools (metalcutting, metal forming), foundry machinery, wood-working and wood processing equipment, printing machinery, mining equipment and material handling machinery.

MC²-HP Series (High Pressure)
Designed for gas engine and compressor lubrication systems. MC²-HP series systems are designed for the gas transmission industry and are available with flouroelastomer seals. The divider valves are compatible with either synthetic or petroleum-based lubricants. High-pressure capability to overcome back pressure with CSA-approved monitoring components available.

Modular Lube Divider Valves

Lincoln divider valve assemblies are comprised of three or more metering valves mounted to a segmented baseplate. The metering valves are available with single or twin outlets and may be externally singled or cross-ported. Extremely close tolerances between piston and valve body allow metering valves to deliver precise volumes of lubricant at high operating pressures.

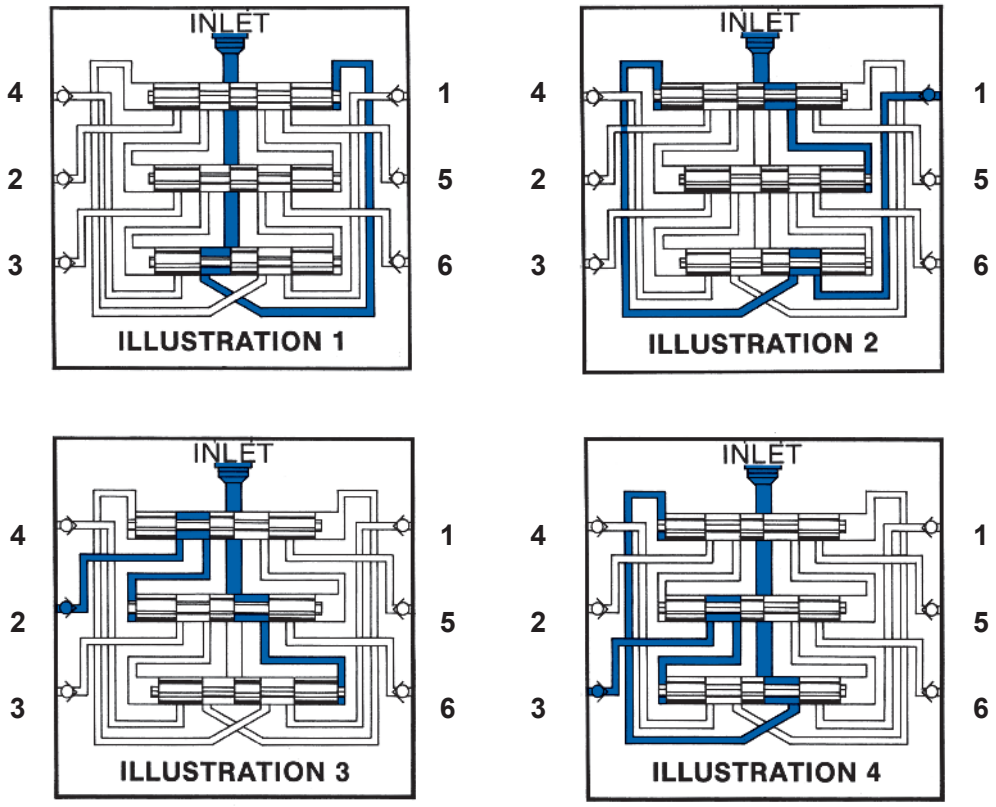

Illustration 1

The inlet passageway is connected to all piston chambers at all times with only one piston free to move at any one time. With all the pistons at the far right, lubricant from the inlet flows against the right end of piston 1 (top).

Illustration 2

Lubricant flow shifts piston 1 from right to left, dispensing lube from outlet 1. The shifting piston 1 directs the lubricant flow against the right side of piston 2 (center).

Illustration 3

Lubricant flow shifts piston 2 from right to left, dispensing lube through valve ports of piston 1 and through outlet 2. The shift of piston 2 directs lubricant flow against the right side of piston 3.

Illustration 4

Lubricant flow shifts piston 3 (bottom) from right to left, dispensing lube through the valve ports of piston 2 and through outlet 3. The shift of piston 3 directs lubricant through a connecting passage to the left side of piston 1. Lubricant flow against the left side of piston 1 begins the second half-cycle, which shifts pistons from left to right, dispensing lubricant through outlets 4, 5 and 6 of the divider valve.

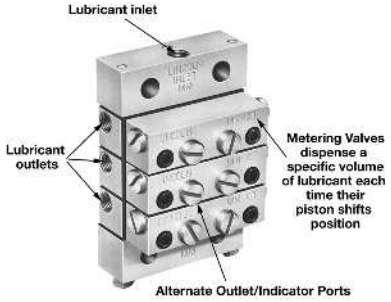

Applications

Lincoln Modular Lube systems are popular in metal cutting and machining applications and for lubricating large compressors and other equipment in the oil and gas market.

Many machine makers specify that Modular Lube be installed right at their factory. Customers who have purchased machines without automatic lubrication can have Modular Lube systems retro-fitted in the field.

UV Divider Valves

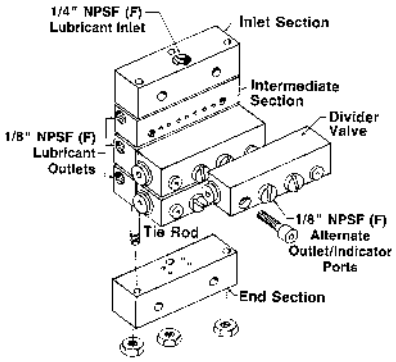

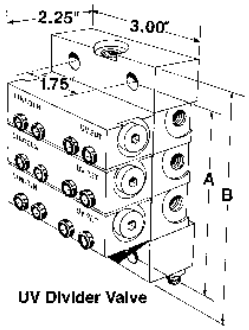

UV Divider Valves are designed to meter oil or grease in automatic or manual systems installed on all types of industrial machinery. Segmented baseplate assembly contains all inlet and outlet connections. Alternate outlet ports are located on the face of the divider valve which may be used for installation of performance indicators.

Specifications:

Max. Lube Points/ Assembly	Max. Oper. press. psig / bar	Inlet Section		Intermediate Section		Performance Indicator Port*	Material of Construction	Seal Construction
		Model	Thread	Model	Thread			
16	3500 / 240	87918	¼" NPSF(F)	87919	⅛" NPSF(F)	⅛" NPSF(F)	Yellow chromate plated steel	Flouroelastomer

* Can also be used as an alternate outlet port.

UV Baseplate and Tie Rod Specifications:

Max. No. of Outlets	No. of Divider Valves	End Section	Tie Rod*	Dimensions			
				A in.	A mm	B in.	B mm
6	3	87920	250290	3.58	90.9	4.52	114.8
8	4		250291	4.5	114.3	5.44	138.2
10	5		250292	5.42	137.7	6.36	161.5
12	6		250293	6.34	161.0	7.28	184.9
14	7		250294	7.27	184.6	8.20	208.3
16	8		250295	8.19	208.0	9.13	231.9

* Each tie rod model number includes three tie rods and three fastening nuts.
Note: Use 68645 closure plug (⅛" NPT) to plug non-working outlets.

UV Divider Valve Specifications:

Single Outlet				
Designation	Model Number		Lubricant Output per Outlet	
	Standard Model	W/Right Side Cycle Indicator	cu. in.	cc
05S	882051	—	.010	.164
10S	882101	—	.020	.328
15S	882151	—	.030	.492
20S	882201	882203	.040	.656
25S	882251	882253	.050	.820
30S	882301	882303	.060	.983
35S	882351	882353	.070	1.147
40S	882401	882403	.080	1.311

Twin Outlet				
Designation	Model Number		Lubricant output per Outlet	
	Standard Model	W/Right Side Cycle Indicator	cu. in.	cc
05T	882052	—	.005	.082
10T	882102	—	.010	.164
15T	882152	—	.015	.246
20T	882202	882204	.020	.328
25T	882252	882254	.025	.410
30T	882302	882304	.030	.492
35T	882352	882354	.035	.574
40T	882402	882404	.040	.656

Model 882000 UV Bypass Block Optional by-pass block permits addition or deletion of lubrication points without disturbing existing installations. Includes mounting screws and Buna-N seals.

MC²-HP Divider Valves

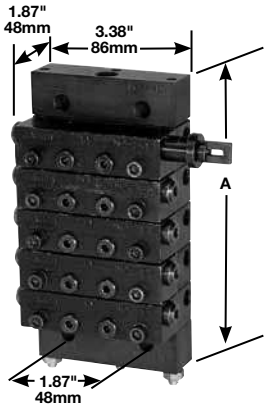

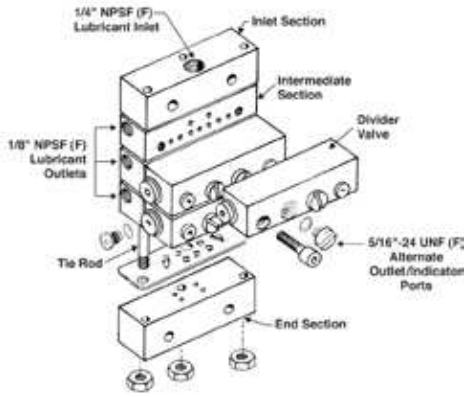

MC²-HP High Pressure Divider Valves are designed to dispense either petroleum-based or synthetic lubricants in gas engine and compressor lubrication systems.
Segmented baseplate assembly contains all inlet and outlet connections. Alternate outlet ports are located on the face of the divider valve which may be used for installation of performance indicators.

Specifications:

Maximum Lube Points/ Assembly	Maximum Operating Press. psig / bar	Lube Inlet	Lube Outlet	Performance Indicator Port	Material of Construction	Seal Construction
16	7500 / 512	¼" NPTF(F)	⅛" NPSF(F)	5⁄16" - 24 UNF	Black chromate plated steel	Flouroelastomer

* Can also be used as an alternate outlet port.

MC²-HP Baseplate and Tie Rod Specifications:

Maximum Number of Outlets	Number of Divider Valves	Inlet Section	End Section	Tie Rod* (Qty Req'd)	Intermediate Section (Qty Req'd)	Dimensions A	
						in.	mm
6	3	87955	87956	236640 (3)	87957 (3)	5.09	129
8	4			236641 (3)	87957 (4)	6.00	152
10	5			236642 (3)	87957 (5)	6.91	176
12	6			236643 (3)	87957 (6)	7.81	198
14	7			236644 (3)	87957 (7)	8.72	221
16	8			236645 (3)	87957 (8)	9.63	245

* Each tie rod model number includes three tie rods.
Note: Use 68645 closure plug (⅛" NPT) to plug non-working outlets. Each 87956 end section contains three tie rod nuts

MC²-HP Divider Valve Specifications:

Single Outlet				
Designation	Model Number		Lubricant Output per Outlet	
	Standard Model	W/Right Side Cycle Indicator	cu. in.	cc
06S	876061	-	.012	.196
09S	876091	-	.018	.295
12S	876121	876123	.024	.393
18S	876181	876183	.036	.590
24S	876241	876243	.048	.787

Twin Outlet				
Designation	Model Number		Lubricant Output per Outlet	
	Standard	W/Right Side Cycle Indicator	cu. in.	cc
06T	876062	-	.006	.098
09T	876092	-	.009	.147
12T	876122	876124	.012	.197
18T	876182	876184	.018	.295
24T	876242	876244	.024	.393

Model 874000 MC²-HP Bypass Block Optional by-pass block permits addition or deletion of lubrication points without disturbing existing installations. Includes mounting screws and flouroelastomer gasket plate.

XL Divider Valves

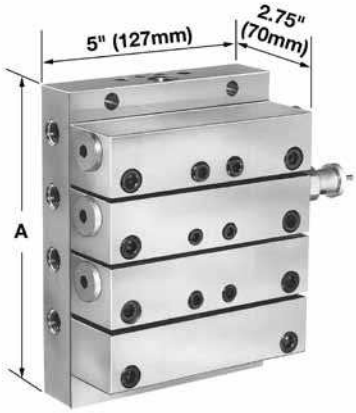

XL Divider Valves are designed to meter large volumes of oil or grease in manual or automatic lubrication systems for all types of industrial machinery. These units can be used in complete XL systems or integrated as a primary divider valve assembly in systems using UV divider valves as secondaries.
Solid one piece baseplate contains all inlet and outlet connections. Convenient front located ports on the divider valve are provided for installation of any desired performance indicators.

Specifications:

Maximum Lube Points/ Assembly	Maximum Operating Press. psig / bar	Lube Inlet	Lube Outlet	Performance Indicator Port*	Material of Construction	Seal Construction
12	2500 / 172	⅜" NPTF(F)	¼" NPTF(F)	⅛" NPTF(F)	Zinc plated steel	Buna-N

* Can also be used as an alternate outlet port.

XL Baseplate Specifications:

Model No.	Maximum Number of Outlets	No. of Divider Valves*	Dimensions	
			A	
			in.	mm
87030-3	6	3	5.34	136
87030-4	8	4	6.69	170
87030-6	12	6	9.38	238

* Use No.67359 closure plug (¼" NPT) to plug non-working outlets.

XL Divider Valve Specifications:

Single Outlet				
Designation	Standard Model	W/Right Side Cycle Indicator	Total Lubricant Output	
			cu. in.	cc
30S	87026-03S	-	.060	.983
50S	87026-05S	-	.100	1.64
80S	87026-08S	-	.160	2.62
100S	87026-10S	-	.200	3.28
120S	87026-12S	-	.240	3.93
150S	87026-15S	-	.300	4.92

Twin Outlet				
Designation	Standard Model	W/Right Side Cycle Indicator	Total Lubricant Output	
			cu. in.	cc
30T	87026-03T	-	.030	.492
50T	87026-05T	-	.050	.820
80T	87026-08T	-	.080	1.31
100T	87026-10T	-	.100	1.64
120T	87026-12T	-	.120	1.97
150T	87026-15T	-	.150	2.46

Model 87028 XL Bypass Block Optional by-pass block permits addition or deletion of lubrication points without disturbing existing installations. Includes mounting screws and flouroelastomer o-ring seals.

UV, XL Divider Valve Accessories

Atmospheric Safety Relief Indicators

High pressure ruptures disc, pressure and lubricant vents to the atmosphere.

UV, XL Model	Pressure Rating		Disc Color	Replacement Disc Model (10/pkg)	Connector
	psig	bar			
87934	1450	100	Yellow	69813-10	⅛" NPTF(M)
87935	1750	120	Red	69813-12	
87936	3250	224	Purple	250312	
87937	3700	255	Yel/Nat	250313	

Reset-Type Performance Indicators

High pressure extends indicator. Reset the indicator after pressure is relieved.

UV, XL Model	Pressure Rating		Connector
	psig	bar	
87938	500	34	⅛" NPTF(M)
87939	1000	69	
87940	1500	103	
87941	2000	138	
87942	3000	207	

Note: O-rings are flouroelastomer

Adapter

Adapter connects UV, XL style performance indicators to MC² style divider valves and old style ML. Includes flouroelastomer O-ring.

Model	Thread
87915	5⁄16" -24 Male x ⅛" NPTF(F)

MC² Divider Valve Accessories

Pin Type Performance Indicators

High pressure ruptures internal disc and extends indicator.

MC Model	Pressure Rating		Disc Color	Replacement Disc Model (10/pkg)	Connector
	psig	bar			
87895	1450	109	Yellow	69813-10	5⁄16"-24 Male
87896	1750	120	Red	69813-12	
87897	2050	141	Orange	69813-14	

Note: O-rings are flouroelastomer

Reset-Type Performance Indicators

High pressure extends indicator. Reset the indicator after pressure is relieved.

Model	Pressure Rating		Spring/Tag Color	Connector
	psig	bar		
87885	1000	69	Green	5⁄16"-24 Male
87886	1500	103	Yellow	
87887	2000	138	Red	
87888	2500	172	Orange	
87889	3000	207	Blue	

Note: O-rings are flouroelastomer

Cycle Switch for Natural Gas Compressors

Designed to work with Lincoln MC, MC² HP valves as wel as with other brands. Simple installation reduces labor costs. Features captured magnet assembly and hall effect switch.

Cycle Switch with Shutdown Feature

- Lower-cost, stand-alone solution
- Shut down protection for “no flow” conditions is factory set at two minutes
- Operates from 5-30 VDC for increased reliability

Part No.	Description	Power Req.	Maximum Working Pressure	Temperature Range	Material	EX Rating
249123	Hall Effect/Cycle Switch with Shutdown for Lincoln MC²-HP series block	5 to 30 VDC, 100 UA max.	7500 psi	-40°C to 85°C (-40°F to 185°F)	Aluminum Housing, Stainless Steel Magnet Assembly	Approval pending for Class I, Groups A, B, C & D, Div. 1 & 2 CE, II 3G Ex Na IIA
249124	Hall Effect/Cycle Switch with Shutdown for Lincoln UV and Graco Lubriquip®-Manzel MHP series style block					

Cycle Switch

Cycle Switch attaches to valve with cycle indicator pin, sends electrical signal to controller.

Model	Switch Type	Switch Capacity	Conduit Connector
87070	SPDT	15 Amps @ 125/250 VAC 0.5 Amps @ 125 VDC	½" - 14 NPSM

Cycle Counter

Cycle Counter attaches to valve with cycle indicator pin, counts and records cycles.

Model	Maximum Counts
87828	99,999

Proximity Switch

Cycle Switch for Natural Gas Compressors

Model	Block Style	Switch Type	Switch Capacity	CSA Certification	Conduit Connector
85651	UV	SPST	10 Watts 200 VDC 0.5 Amp	Class I, Group A, B, C & D / Class II, Group E, F & G Hazardous Locations	½" NPT(F)
87617*	MC				
87618	XL Size 03 thru12				

*Can be used with Model 87630 Datalogger Lubrication Monitor

External Singling/Cross Port Kit

External Cross Port Kit connects alternate outlet ports to combine the volume of two divider valves through a single outlet.

Model	Block Type	Application/Usage
87905	MC	Single and Crossport
87823	XL	Crossport
87824	XL	Singling
87825	UV	Crossport

Balancing Valve

Model 87865 Balancing Valve is used when back pressure differential between divider valve outlets exceeds 1000 psi (69 bar).

Model	Pressure Adjustment				Inlet/ Outlet	Seal Material
	Min		Max			
	psig	bar	psig	bar		
87865	250	17	6000	414	⅛" NPTF(F)	Flouroelastomer

Mounting Bracket

Model 250286 (UV) and Model 360675 (MC²) Mounting Brackets—
Mount divider valve assembly off the face of vertical surfaces. Use two brackets per divider valve assembly.

Check Valves

Check valves maintain prime in feed lines and check back pressure from pressurized lubrication points.

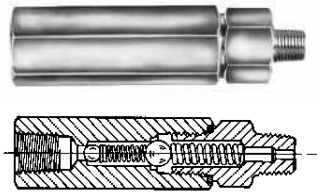

Double Ball, Straight

Model	Pressure		Inlet	Outlet	Hex Material	Hex Inlet-in.	Hex Outlet-in.	Length in./mm
	Max	Opening						
880511	8000 psig 552 bar	145 psig 10 bar	¼" NPTF(F)	¼" NPTF(M)	Carbon Steel	13/16"	¾"	3.72/94.5
880518-9					316 S.S.			3.75/95.3
880517			⅛" NPTF(F)	⅛" NPTF(M)	Carbon Steel			3.31 / 84.1
880519-9					316 S.S.			
880015-9	5000 psig 345 bar	80 psig 6 bar	9/16-18 UNF (M)	7/16-20 UNF (M)	Stainless Steel	¾"		2.75/70

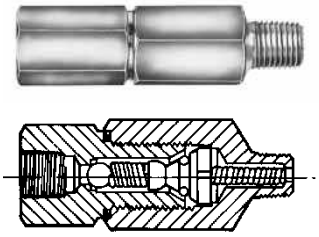

Ball & Poppet, Straight

Model	Pressure		Inlet	Outlet	Hex Material	Hex Inlet-in.	Hex Outlet-in.	Length in./mm
	Max	Opening						
880513	2000 psig 138 bar	50 psig 3.5 bar	⅛" NPTF(F)	⅛" NPTF(M)	Carbon Steel	¾"	13/16"	2.75 70.0
880514			¼" NPTF(F)	¼" NPTF(M)				3.06 77.7

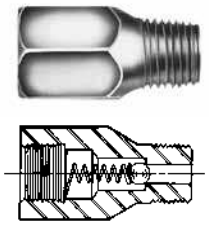

Ball Type, Straight

Model	Pressure		Inlet	Outlet	Hex Material	Hex in.	Length in./mm
	Max	Opening					
87817	7500 psig 517 bar	20-70 psig 1.5-5 bar	¼" NPTF(M)	¼" NPSF(F)	Carbon Steel	11/16"	1.38/35.1
87818			⅛" NPTF(M)	⅛" NPTF(F)		9/16"	1.19/30.2
130021-3	6000 psig 414 bar	31-70 psig 2-5 bar	⅛" NPTF(F)	⅛" NPTF(M)		½"	1.06/27.0

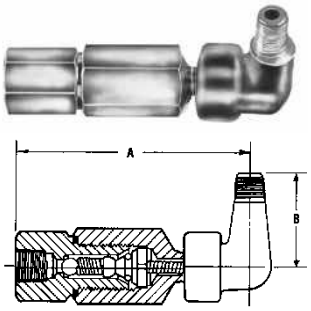

Ball & Poppet, 90°

Model	Pressure		Inlet	Outlet	Hex Material	Hex Inlet-in.	Hex Outlet-in.	Dimensions in. / mm	
	Max	Opening						A	B
880515	2000 psig 138 bar	50 psig 3.5 bar	⅛" NPTF(F)	⅛" NPTF(M)	Carbon Steel	¾"	13/16"	3.38 86	1.25 31.8

Lubricant flows through Supply Lines between the pump and divider valves, then through Feed Lines between the divider valve and the bearing. Tubing and/or pipe sizes are determined after considering both the length of the line and the specific lubricant intended for use in the system.

Your Lincoln representative can assist you in the proper selection of supply and feed line material to optimize your application.

Listed below is a simplified outline of the installation components offered. For a complete listing of products, please refer to the Installation Components catalog.

TUBING

- Hydraulic, Steel, Stainless Steel and Nylon
- Single and Multiple Tube Clamps
- Heavy-Duty, Standard-Duty, Threaded Sleeve and Snap-On Coupler Tube Fittings
- Quicklinc® Tubing Adapter
- Zerk-Lock™ Grease Fitting Adapters
- Non-Metallic

PIPING

- Seamless
- Continuous Welded
- Forged Fittings
- Malleable Iron Fittings
- 316 Stainless Steel Pipe and Fittings
- Stainless Steel Fittings
- Galvanized Pipe, Threaded Plug and Fittings

ACCESSORIES

- Supply, Feed and Bulk Feed Line Hose
- Air Hose
- Kits for Hose Repair
- Heavy-Duty Air Line Quick Disconnects

AIR CONTROL AND ACCESSORIES

- Manual Shut-Off Valves
- Pressure Gauges
- Lubricant Filters and Strainers

AIRCARE™ AIR PREPARATION SYSTEMS

- Modular Air Line Filters, Regulators and Lubricators
- Integrated/Modular Filter/Regulator with Gauge
- Modular Air Line Combination Units
- High-Capacity Air Line Filters, Regulators and Lubricators
- High-Capacity Air Line Combination Units
- Miniature Air Line Components—Air Line Filter, Regulator and Lubricator
- Miniature Air Line Combination Units
- Modular Air Line Equipment Accessories:
  Lockout Valve, Quick Clamp, Quick Clamp Wall Mounting Bracket, Porting Block, Quick Mount Pipe Adapters, Manifold Block, Pressure Switch, Panel Nut, Wall Mount Bracket, Tamper Resistant Cover & Seal Wire
- Air Line Equipment Accessories:
  Wall Mount Bracket, High-Capacity; Mounting Bracket and Nut, Miniature; Pressure Gauges

PIPE FITTINGS

- Reducing Bushings
- Nipples
- Couplings
- Reducing Couplings
- Street Ells
- Tees
- Crosses
- Adapter Unions
- Elbows
- Pipe Fitting Adapters
- Supply Line Swivels
- Feed Line Swivels
- Anchor and Junction Blocks

Modular Pumps

Lincoln's modular pumps are designed to efficiently supply either grease or oil in automatic systems using divider valve metering devices. Air, hydraulic and mechanically operated units are available. These units are then matched with an appropriate intermediate baseplate, and an appropriate reservoir to make up a pump assembly.

If required, the reservoir can be remotely mounted for ease of filling, utilizing a machine mounted baseplate and pump.

Baseplates contain all of the inlet and outlet connections for the pump and lube system. Intermediate baseplates mounted between the pump and reservoir allow for quick pump removal without disturbing any existing piping. Removal of the pump does not require draining of the reservoir due to an integral check-valve in the baseplate.

All modular reservoirs are compatible with all pumps, offering extreme flexibility in system design.

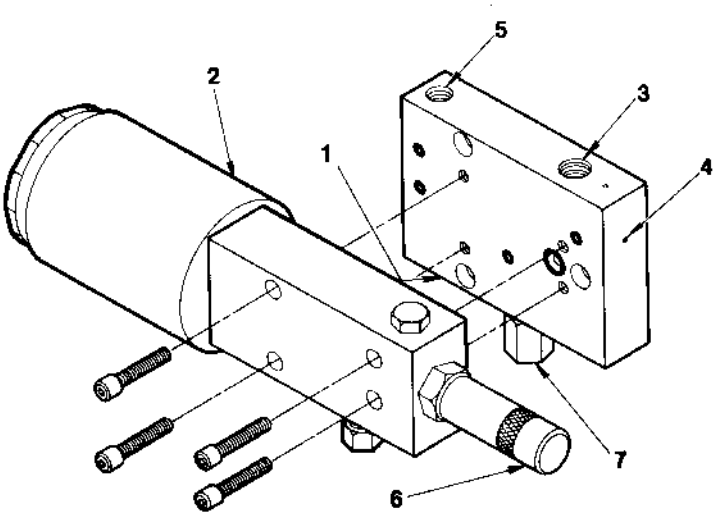

1. Base Plate
2. Pump Body
3. Lubricant Inlet
4. Bleed or Test Screw
5. Air inlet for both Single Acting and Double Acting Pumps
6. Adjustment Screw Assembly
7. Lubricant Outlet

PUMP & RESERVOIR

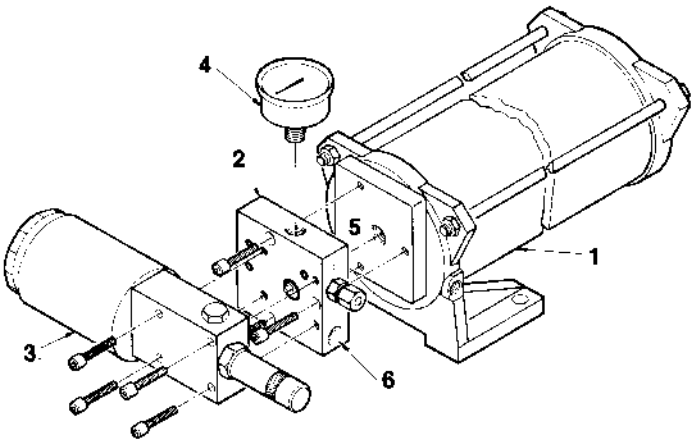

1. Cylindrical Oil Reservoir
2. Intermediate Base Plate
3. Modular Automation Pump
4. Pressure Gauge
5. Lubricant Inlet
6. Lubricant Outlet

Air Operated Modular Pumps

Model 87200

Model:	87200
Ratio:	25:1
Displacement – Min.:	.025 cu. in. / .410 cc
Displacement – Max.:	.100 cu. in. / 1.639 cc
Air Pressure – Min.:	65 psig / 4.5 bar
Air Pressure – Max.:	150 psig / 10 bar
Dimensions (HxWxL) – in.:	2.75" x 9.88" x 2.75"
Dimensions (HxWxL) – mm:	69.8 x 250.9 x 69.8 mm
Cylinder Type:	Single acting, spring return
Air Valve Requirement:	3-Way

Model 87216

Model:	87216
Ratio:	50:1
Displacement – Min.:	.010 cu . in. / .164 cc
Displacement – Max.:	.050 cu. in. / .820 cc
Air Pressure – Min.:	35 psig / 2.5 bar
Air Pressure – Max.:	150 psig / 10 bar
Dimensions (HxWxL) – in.:	2.75" x 9.88" x 2.75"
Dimensions (HxWxL) – mm:	69.8 x 250.9 x 69.8 mm
Cylinder Type:	Single acting, spring return
Air Valve Requirement:	3-Way

Model 130179

Model:	130179
Ratio:	25:1
Displacement – Min.:	.25 cu. in. / 1.0 cc
Displacement – Max.:	1.0 cu. in. / 16.39 cc
Air Pressure – Min.:	65 psig / 4.5 bar
Air Pressure – Max.:	150 psig / 10 bar
Dimensions (HxWxL) – in.:	5.50" x 15.38" x 4.50"
Dimensions (HxWxL) – mm:	139.7 x 290.6 x 114.3 mm
Cylinder Type:	Single acting, spring return
Air Valve Requirement:	3-Way

Notes:

Model 87200, 87216, 130280 pumps do not have valved pistons. Use Modular Lube reservoirs only.
Model 130179 pump with valved piston uses Modular Lube reservoir or pressurized (max. 2000 psig/140 bar) lube supply.
All pumps include flouroelastomer O-rings for standard or synthetic lubricant.

Hydraulic Operated Modular Pumps

Model 87202

Model:	87202
Ratio:	7:1
Displacement – Min.:	.025 cu. in. / .100 cc
Displacement – Max.:	.10 cu. in. / 1.639 cc
Hydraulic Pressure – Min.:	275 psig / 20 bar
Hydraulic Pressure – Max.:	2000 psig / 138 bar
Dimensions (HxWxL) – in.:	2.13" x 9.50" x 1.88"
Dimensions (HxWxL) – mm:	54.1 x 241.3 x 47.7 mm
Cylinder Type:	Double acting
Directional Valve Requirement:	4-Way

Notes:

Pump includes flouroelastomer O-rings for standard or synthetic lubricants.
Pump does not have valved pistons. Use Modular Lube reservoirs only.

Modular Pump Baseplates

Mount pump directly to a modular reservoir with intermediate baseplate.
Use machine mounted baseplates with remote reservoirs.

Model	Description	Use with Pump Model	Air/ Hydraulic Inlet	Lube Inlet	Lube Outlet	Dimensions in. / mm			Atmos. Indicator psi / bar
						Height	Width	Depth	
87218	Inter-mediate	87200, 87202, 87216	⅛" NPTF(F)	—	¼" NPTF(F)	3.25 82.6	3.25 82.6	1.00 25.4	1450 100
87204	Machine Mount		¼" NPTF(F)	⅜" NPTF(F)		3.19 78.7	4.69 119.1		
130095		130179				4.00 101.6	4.50 114.3	150 38.1	

Note:
Baseplates include flouroelastomer O-rings for standard or synthetic lubricants.

Modular Reservoirs for Oil Systems

Model	Type		Capacity				Material	Dimensions - in. / mm		
	Style	Outlet	gal.	liter	cu. in.	cc		Height	Width	Depth
87400	Cylin-drical	½" NPTF(F)	.625	2.4	144	2350	Acrylic	15.69 399	6.00 152.6	5.31 135.0
87413			1.25	4.7	289	4750		17.69 450	7.31 186.0	7.47 189.7
87417	Tank	⅜" NPTF(F)	5	18.9	1155	18900	Steel	10.12 257.4	17.50 445.2	12.56 319.0
87418			3	11.3	693	11350			13.50 343.4	11.56 294.1
87419			1.5	5.7	346	5675			10.50 267.1	7.56 192.3

Note:
All reservoirs will accept 87218 Intermediate Baseplates.

Modular Reservoirs for Grease Systems

Model	Capacity				Material	Dimensions - in. / mm		
	lbs.	kg	cu. in.	cc		Height	Width	Depth
87406	10	4.54	300	4900	Acrylic	17.69 450	7.31 186.0	7.47 189.7
87416	15	6.82	450	7350		25.19 640.8		7.47 189.7
87421 *	10	4.54	300	4900	Steel	17.69 450		7.41 188.2
87423 *	15	6.82	450	7350		25.19 640.8		

* Includes visual level indicator rod.

Note:
All reservoirs accept Model 87218 Intermediate Baseplates. Reservoirs include standard ½" NPTF(F) outlet. Filler fitting Model 632004.

Low-Level Switches

Low-level switches for modular design reservoirs.

Model	Use with Reservoir #	Switch Type	Electrical Rating
84235	87417, 87418, 87419	SPDT	7 Amps 125 / 250 VAC
84250	87400	SPDT	
84252	87414	SPDT	
87852	87402, 87403, 87406, 87416	SPDT	15 Amps 125 / 250 VAC
83371		SPDT	15 Amps; 125, 250, 480 VAC .5 Amp 125 VDC .25 Amp 250 VDC

Low-Level Switch Assembly Kits for pneumatic and electric reciprocating pumps with self-contained reservoirs.

Model	Use with Pump Model	Switch Type	Electrical Rating
83671	87240, 87228	SPDT	15 Amps; 125, 250, 480 VAC .5 Amp 125 VDC .25 Amp 250 VDC
83696	87239		

High-Pressure Switch

High-pressure switch signals blockage and returns pump output to reservoir.

Model	Pressure Rating - psig / bar	Switch Type	Electrical Rating
87851	1450 / 99	SPDT	15 Amps, 125/250 VAC

Model 87212

Model:	87212
Type:	Hydraulic
Ratio:	5:1
Hydraulic Pressure – Min.:	200 psi / 14 bar
Hydraulic Pressure – Max.:	1000 psi / 68 bar
Lubricant Output/Cycle – Min.:	.010 cu. in. / .164 cc
Lubricant Output/Cycle – Max.:	.060 cu. in. / .983 cc
Cylinder Type:	Double acting
Directional Valve Requirement:	4-Way

Model 87214

Model:	87214
Type:	Air
Ratio:	18:1
Air Pressure – Min.:	60 psi / 4 bar
Air Pressure – Max.:	200 psi / 14 bar
Lubricant Output/Cycle – Min.:	.010 cu. in. / .164 cc
Lubricant Output/Cycle – Max.:	.060 cu. in. / .983 cc
Cylinder Type:	Single acting
Directional Valve Requirement:	3-Way

Note:
Pumps include Buna-N O-rings.

Modular LP-Style Reservoirs

Mount directly to LP pumps. Includes 3000 psig (200 bar) gauge and 900 psig (62 bar) atmospheric indicator. Transparent, polycarbonate construction.

Model	Lubricant Type	Capacity					Air Hydraulic	Lube Outlet	Dimensions - in. / mm		
		lb/ pint	kg.	liter	cu. in.	cc			Height	Width	Depth
87402	Grease	3 lb	1.36	—	90	1475	⅛" NPSM (F)	⅛" NPSM (F)	11.6 / 295	6.78 172.2	7.06 179.6
87403		5 lb	2.27	—	150	2450			14.6 / 371		
87405	Oil	5 pint	—	2.36	144	2365			10.3 / 262		

Model 87240 Air-Operated Reciprocating Pump

Model:	87240
Lubricant Type:	Grease
Lubricant/Air Ratio:	40:1
Output/Min. @ 100 psig Air (cu. in.):	12
Output/Min. @ 100 psig Air (cc):	197
Reservoir Capacity* (lbs.):	12
Reservoir Capacity* (kg):	5.45
Reservoir Capacity* (cu. in.):	360
Reservoir Capacity* (cc):	5900
Air Inlet:	⅛" NPTF(F)
Lube Outlet:	¼" NPTF(F)
Dimensions (HxWxD) – in:	20.5" x 9" x 16.25"
Dimensions (HxWxD) – mm:	521.3 x 229 x 413 mm

* Transparent Acrylic Reservoir

Model 87239 Air-Operated Reciprocating Pump

Model:	87239
Lubricant Type:	Oil
Lubricant/Air Ratio:	40:1
Output/Min. @ 100 psig Air (cu. in.):	12
Output/Min. @ 100 psig Air (cc):	197
Reservoir Capacity* (pints):	15
Reservoir Capacity* (liter):	7.1
Reservoir Capacity* (cu. in.):	433
Reservoir Capacity* (cc):	7100
Air Inlet:	⅛" NPTF(F)
Lube Outlet:	¼" NPTF(F)
Dimensions (HxWxD) – in:	20.5" x 9" x 16.25"
Dimensions (HxWxD) – mm:	521.3 x 229 x 413mm

* Transparent Acrylic Reservoir

Note:
Both models require a 3-way air valve.

Atmospheric Indicator Pressure: Model 87240 – 2650 psi/183 bar
Model 87239 – 1450 psi/100 bar

Model 87228 Electric-Operated Reciprocating Pump

Model:	87228
Lubricant Type:	Grease
Electrical Requirements:	220/440, 60 Hz 3 ph
Output/Minute (cu. in.):	18
Output/Minute (cc):	295
Reservoir Capacity* (lbs.):	12
Reservoir Capacity* (kg):	5.45
Reservoir Capacity* (cu. in.):	360
Reservoir Capacity* (cc):	5900
Lube Outlet:	¼" NPTF(F)
Dimensions (HxWxD) – in:	25.38" x 9.94" x 18.06"
Dimensions (HxWxD) – mm:	645 x 253 x 459 mm
Relief Valve (psig):	3700 psig
Relief Valve (bar):	255 bar

* Transparent Acrylic Reservoir

MCLP Pumps

For natural gas engine/compressor lubrication systems.

Model 130201BCC

MCLP Pump complete with pump heads.

Model:	130201BCC
Type Drive:	Rotary
Shaft Description:	Left-hand end, long shaft
Gear Ratio:	2:1
Decimal Gear Ratio:	.5
Cam:	Single lobe
Pump Heads: (Model 130335)	10 mm (2 each)
Performance Indicator:	7300 psig / 500 bar

Model 130200GEE

Model:	130200GEE
Type Drive:	Rotary
Shaft Description:	Left-hand end
Gear Ratio:	8:1
Decimal Gear Ratio:	.125
Cam:	Single lobe
Pump Heads (Max of 2):	Order separately
Performance Indicator:	Dependent on pump head

Model 130200KEE

Model:	130200KEE
Type Drive:	Rotary
Shaft Description:	Left-hand end
Gear Ratio:	21.5:1
Decimal Gear Ratio:	.047
Cam:	Single lobe
Pump Heads (Max of 2):	Order separately
Performance Indicator:	Dependent on pump head

Model 130200DEE

Model	130200DEE
Type Drive:	Rotary
Shaft Description:	Left-hand end
Gear Ratio:	4:1
Decimal Gear Ratio:	.25
Cam:	Single lobe
Pump Heads (Max of 2):	Order separately
Performance Indicator:	Dependent on pump head

Model 130300GEE

Model:	130300GEE
Type Drive:	Rotary
Shaft Description:	Right-hand end
Gear Ratio:	8:1
Decimal Gear Ratio:	.125
Cam:	Single lobe
Pump Heads (Max of 2):	Order separately
Performance Indicator:	Dependent on pump head

Model 130300KEE

Model:	130300KEE
Type Drive:	Rotary
Shaft Description:	Right-hand end
Gear Ratio:	21.5:1
Decimal Gear Ratio:	.047
Cam:	Single lobe
Pump Heads (Max of 2):	Order separately
Performance Indicator:	Dependent on pump head

Notes:
1. Recommended camshaft speed (RPM) for all pumps is: 12 to 75 rpm.
2. MCLP output (per pump) = Input speed x decimal ratio x pump output factor* = pints per day
* See MCLP pump head chart for pump output factor

MCLP Pump Heads

Model	Piston Diameter	Max. Working Pressure psig/bar	Pump Output Factor		Max. Inlet Pressure psig/bar	Pump Inlet	Pump Outlet	Performance Indicator psi/bar
			Min 1 Turn	Max 5 Turns				
130332	7mm	8000/544	.10	.731	50 3.5	⅜" NPTF(F)	¼" NPTF(F)	5500/374
130335	10mm	3500/238	.213	1.491				3250/221

Flow Restrictor

Flow restrictor for LP Pumps with high air or hydraulic supply pressure.

Model	For Pressure Exceeding - psig / bar		Connections
	Pneumatic	Hydraulic	
15104	100 / 7	500 / 34	⅛" NPTF(F) x ⅛" NPTF(M)

MCLP Pump Inlet Filters

Model	Pump Heads Served	Filter Size	Inlet	Max. Inlet Pressure psig / bar
130067	2	10 Micron	1" NPTF(F)	50 / 3.5

In-Line Lubricant Filters

Remove solid contaminants before delivering lubricants to the supply line.

Part No.	Element Size micron	Maximum Pressure	Connections in.	Hex Body Size - in.
* 84239	10	6000 psig / 414 bar	¼ NPTF (F)	1¼

* In-line filter with flouroelastomer seal.

Filler Pump

Manual pump for system purging and troubleshooting.

Model	Max. Press. Gauge Reading psig / bar	Reservoir Capacity	Outlet Adapters
130117	3000 / 207	16 oz.	5/16" - 24 UNF(M), 7/16" - 20 UNF(M), ⅛" NPTF(M), ¼" NPTF(M)

No-Flow Valves

MCL pump no-flow valves shut down engine or signal fault if oil flow is interrupted.

Model	Signal Type	Max. Operating Pressure psig / bar	Oil Viscosity Range	Inlet/Outlet		Air Supply	Electrical Rating	3rd Party Approvals
				Air	Oil			
87862	Pneum.	6000 / 414	60 SSU-3000 SSU	⅛" NPTF(F)	¼" NPTF(F)	150 psi max	—	—
87601	Electric					—	1 amp, 115 VAC .5 amp, 32 VDC	CSA Class I, Group D Class II, Group E, F & G

Notes:
1. Minimum flow rate .060 cu. in./minute with time delay setting of 90 seconds.
2. Includes flouroelastomer oil seals.

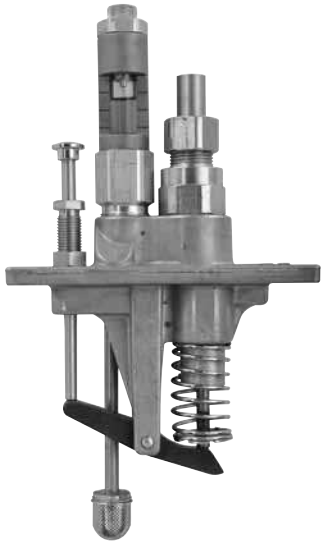

Model 55i Lubricator Pump

Universal lubricator pump fits most major manufacturers' lubricator boxes. One piece pump body eliminates leak points.

Model	Type	Piston Dia. in. / mm	Inlet	Sight Glass	Max. Operating Pressure psi / bar	Max. Oil Viscosity (SUS)	Max. Output Per Stroke Drops (in³/ cc)
880550	Vacuum Feed	¼ / 6.4	Suction Tube	Yes	6000 / 400	8000 / 540	9 (.0184 / .302)
880560		⅜ / 9.5			3500 / 240		21 (.0415 / .680)
880551	Press. Inlet (Manifold) Feed	¼ / 6.4	⅛" NPTM		6000 / 400		9 (.0184 / .302)
880561		⅜ / 9.5			3500 / 240		21 (.0415 / .680)
880552	Direct Feed	¼ / 6.4	⅛" NPTF	No	6000 / 400		9 (.0184 / .302)
880554	Direct Feed	⅜ / 9.5		Yes	3500 / 240		21 (.0415 / .680)
880553 *	Press. Inlet (Manifold) Feed	3/16 / 4.8			3500 / 240		

* Similar to model 880561 but does not include tubing and valve connections.

Notes: Standard flouroelastomer seals.
Sight glass is armored Pyrex® glass.
See Pump to Point Lubricator Accessories page for armored site glass kit (model 250176).

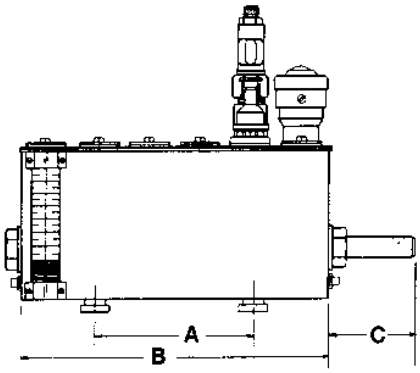

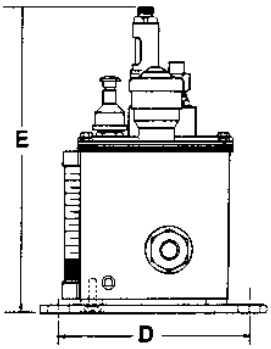

End Rotary Drive Lubricators

Internal Gear and Ratchet

Drive Data: Type – End rotary with internal gear and ratchet. **37.5:1 ratio.**
Rotation – Either clockwise or counterclockwise.
Power Source – Machine drive; not recommended for motor drive.
Maximum Input Speed – 700 RPM.

Note: Number following dash in the part number indicates quantity of pumps included.

Model	Reservoir Capacity	Max. No. of Pumps	Drive Location	Service Sheet Number
800037-1	4 pint / 1.9L	5	RH	M2-26
800037-3	4 pint / 1.9L	5	RH	M2-26
800037-4	4 pint / 1.9L	5	RH	M2-26
800028-3	4 pint / 1.9L	5	LH	M2-43
800131-5	8 Pint / 3.8L	7	RH	M2-25
800019-5	8 Pint / 3.8L	7	LH	M2-40

Model	Dimensions—in. / mm					Shaft Dia.
	A	B	C	D	E	
800037-1	5½ / 140	10⅝ / 270	3 / 76	6 9/16 / 167	10⅜ / 264	⅝ / 16
800037-3						
800037-4						
800028-3						
800131-5	8¾ / 222	14⅛ / 359				
800019-5						

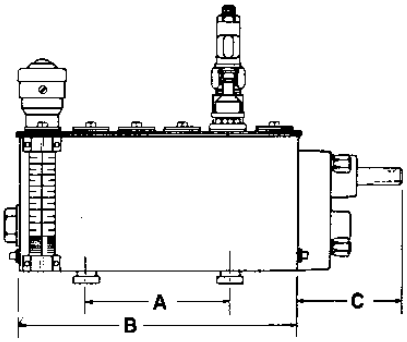

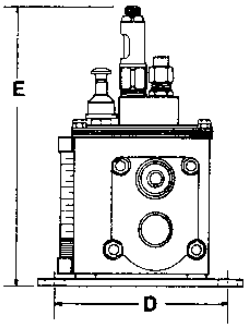

End Rotary Drive Lubricators

Spur Gear

Drive Data: Type – End rotary with spur gear. **112.5:1 ratio.**
Rotation – Either clockwise or counterclockwise.
Power Source – Machine drive; not recommended for motor drive.

Note: Number following dash in the part number indicates quantity of pumps included.

Model	Reservoir Capacity	Max. No. of Pumps	Drive Location	Service Sheet Number
800066-2	4 pint / 1.9L	5	RH	M2-20
800066-3	4 pint / 1.9L	5	RH	M2-20
800143-3	4 pint / 1.9L	5	LH	M2-136
800289-4	8 Pint / 3.8L	7	RH	M3-21
800289-5	8 Pint / 3.8L	7	RH	M3-21
800289-6	8 Pint / 3.8L	7	RH	M3-21

Model	Dimensions—in. / mm					Shaft Dia.
	A	B	C	D	E	
800066-2	5½ / 140	10⅝ / 270	4 / 102	6 9/16 / 167	10¾ / 273	⅝ / 16
800066-3	5½ / 140	10⅝ / 270	4 / 102	6 9/16 / 167	10¾ / 273	⅝ / 16
800143-3	5½ / 140	10⅝ / 270	4 / 102	6 9/16 / 167	10¾ / 273	⅝ / 16
800289-4	8¾ / 222	14⅛ / 359	4 / 102	6 9/16 / 167	10¾ / 273	⅝ / 16
800289-5	8¾ / 222	14⅛ / 359	4 / 102	6 9/16 / 167	10¾ / 273	⅝ / 16
800289-6	8¾ / 222	14⅛ / 359	4 / 102	6 9/16 / 167	10¾ / 273	⅝ / 16

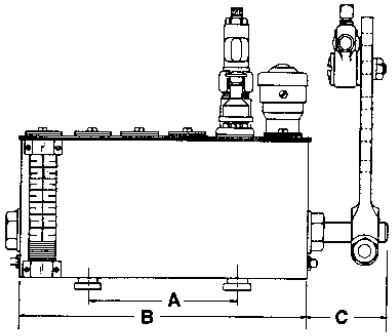

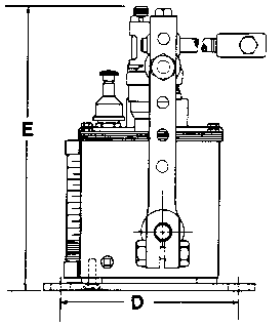

Internal Ratchet Drive Lubricators

Drive Data: Type – Internal 75-tooth ratchet gear.
Rotation – See chart for power stroke direction.
Power Source – Machine drive.

Note: Number following dash in the part number indicates quantity of pumps included.

Model	Reservoir Capacity	Max. No. of Pumps	Drive Location	Power Stroke	Service Sheet Number
800065-1	2 pint / .95L	2	LH	CW	M3-31
800376-2	3 pint / 1.4L	3	RH	CW	M3-31
800118-2	4 Pint / 1.9L	5	RH	CW	M2-164
800118-3	4 Pint / 1.9L	5	RH	CW	M2-164
800100-2	4 Pint / 1.9L	5	LH	CW	M3-31
800031-3	8 Pint / 3.8L	5	RH	CW	M3-31

Model	Dimensions—in. / mm					Shaft Dia.
	A	B	C	D	E	
800065-1	3¾ / 95	5⅜ / 137	3 / 76	6 9/16 / 167	10½ / 269	⅝ / 16
800376-2	5½ / 140	7⅛ / 181			10¾ / 273	
800118-2		10⅝ / 270			10⅜ / 264	
800118-3					10⅜ / 264	
800100-2					10¾ / 273	
800031-3	8¾ / 222	14⅛ / 359				

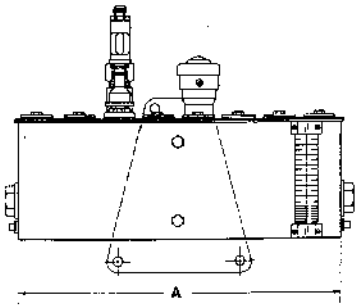

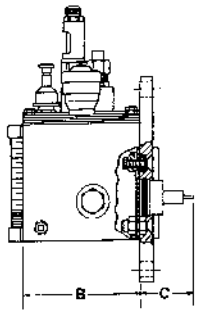

Rear Rotary Drive Lubricators

Note: Number following dash in the part number indicates quantity of pumps included.

Model	Reservoir Capacity	Max. No. of Pumps	Drive Location	Ratio	Service Sheet Number
800621-4	8 Pint / 3.8L	6	LH	60:1	M2-42
800784-2	8 Pint / 3.8L	6	LH	137.5:1	M3-18

Model	Dimensions—in. / mm			Shaft Dia.
	A	B	C	
800621-4	10⅝ / 270	5³⁄₁₆ / 132	1⅞ / 48	⅝ / 16
800784-2	14⅛ / 359	5³⁄₁₆ / 132	2¼ / 57	½ / 13

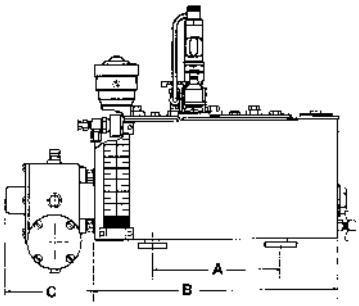

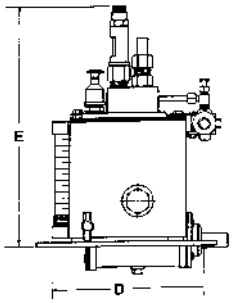

Left-Hand Rear Gearhead Drive Lubricators

Note: Number following dash in the part number indicates quantity of pumps included.

Model	Reservoir Capacity	Max. No. of Pumps	Ratio	Service Sheet Number
800059-1	4 pint / 1.9L	5	60:1	M2-19
800059-2				

Model	Dimensions—in. / mm					Shaft Dia.
	A	B	C	D	E	
800059-1	5½ / 140	10⅝ / 270	3¹³⁄₁₆ / 97	6⁹⁄₁₆ / 167	10⅞ / 276	⅝ / 16
800059-2						

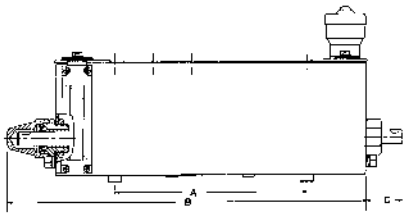

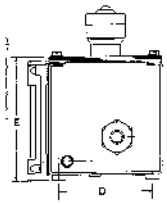

End Rotary Drive Tandem Lubricators

Drive Data: **Type –** End rotary all gear.
Rotation – Either clockwise or counterclockwise.
Power Source – Machine drive; also suitable for motor drive.

Note: Pumps and slot covers must be purchased separately

Model	Reservoir Capacity	Max. No. of Pumps	Drive Location	Ratio	Service Sheet Number
847400	8 pint / 3.8L	6	RH	300:1	M2-218

Model	Dimensions—in. / mm					Shaft Dia.
	A	B	C	D	E	
847400	8¾ / 222	16⁵⁄₁₆ / 414	2⅝ / 67	4¼ / 108	5⁷⁄₁₆ / 138	⅝ / 16

Model 276517 Armored Sight Glass Kit

With pyrex sight tube.

Model 880555 Lube Sentry

Monitors camshaft rotation and reservoir level.

Model 880556 Lube Sentry

Same as Model 880555 except suction tube is 1/2” shorter.

Model 880496 Oil Level Regulator

Automatically fills lubricator reservoir.

Model 880463* Lubricator Flow Switch

Monitors Model 55i lubricant flow.

Model 880466* Lubrication Flow Switch

Same as Model 880463 except includes terminal for series wiring.

* Use with non-conductive fluids only. Lubricator must be properly grounded.

Lubricator Cover Plate Assembly

Model 360654 - Cover Plate

Model 250132 - Gasket

Model 70224 - Screws

Lincoln's New Product Lineup for the Natural Gas Compression Industry

Innovative solution designed to protect your compressors against untimely lubrication faults or "no flow" conditions.

Model 87630 Datalogger Lubrication Monitor

- Three mounting options
- Two primary power sources available
- Continuously monitors the packing and cylinder lubrication system
- Download feature allows history to be transferred to a CSV report via a USB flash drive in less than a minute
- Store data for up to one year
- No special software or hand-held hardware device needed
- One model will monitor either a single or dual lubrication system
- Designed for use with Reed or Hall effect cycle switches

Part No.	**87630**
Input Power:	10-30 VDC 0.25 Amp Max.
Internal Battery:	3.6 V Long-Life Lithium Tardiran TL-5930, battery life 4-6 years
Output Switches:	2 each open drain sinking FET's, rated 30 VDC 500mA max.
Ambient Temp. Range:	Operation, -40°C to 85°C (-40°F to 185°F) LCD -20°C to 70°C USB Download 0°C to 70°C
Display:	2x16 Backlit Character
Input Cycle Range:	5 to 300 seconds
Units of Measure:	Pints, liters or gallons
Alarm Time:	Adjustable from 5 to 300 seconds
Switch Response Time:	250 mS max.
USB Download Port:	USB 2.0 compliant, accepts universal flash drive
Data Log File Format:	Comma-Separated Values File (CSV) for use in programs including Microsoft® Excel
EX Rating:	Class I, Groups A, B, C & D, Div. 2 CE, II 3G Ex Na IIA
Outlet Thread:	1/2" NPT (F)

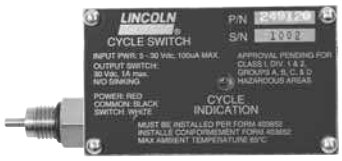

Cycle Switch and Accessories for use with Datalogger Lubrication Monitor

Designed to work with Lincoln MC, MC² HP valves as well as with other brands. Simple installation reduces labor costs. Features captured magnet assembly and Hall Effect Switch. The industry's FIRST cycle switch with a cycle indicator light.

Model	Description	Power Req.	Maximum Working Pressure	Temp. Range	Material	EX Rating
249120	Hall Effect Cycle Switch for Lincoln MC²-HP series blocks	5 to 30 VDC, 100 UA max.	7500 psi	-40°C to 85°C (-40°F to 185°F)	Aluminum Housing, Stainless Steel Magnet Assembly	Approval pending for Class I, Groups A, B, C & D, Div. 1 & 2 CE, II 3G Ex Na IIA
249122	Hall Effect Cycle Switch for Lincoln UV and Graco Lubriquip®-Manzel MHP series style block					
87617	Reed Type Cycle Switch for Lincoln MC and MC²-HP series block					
250001	Wall Mounting Bracket for 87630					
249125	EX Housing, Rated Class 1, Div 1 and 2, Group B, C, D					
250002	Internal 3.6v Lithium Replacement Battery					
250010	Replacement USB Port Cap					

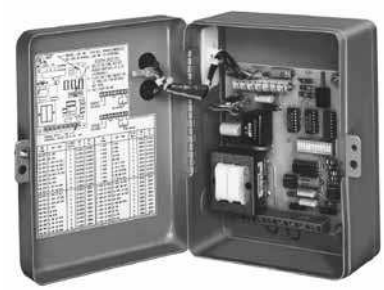

Model 84501 Program Timer-Solid State

Designed to control the lubrication cycle frequency of air-operated single-stroke pumps. Timer turns pump on/off at programmed intervals via a 3-way or 4-way air solenoid valve (not included) installed in the air line to pump.

Off Time (Cycle Time)		On Time (Pumping Time)		Power Requirement	Approvals	Switch Capacity
Min.	Max.	Min.	Max.			
20 Sec.	24 Hrs.	10 Sec.	1 Min. 24 Sec.	120/230 VAC 50/60 Hz	UL, CSA	120 VAC, 5 Amps 230 VAC, 1.5 Amps

Built-In Program Options		Enclosure				Ambient Operating Temperature Range	
3 Hr. Program Memory	Prelube Function	Rating	Dimensions-in./mm			Minimum	Maximum
			Height	Width	Depth		
Yes / No	Yes / No	NEMA #1	8¼ /210	6¹³⁄₁₆ /173	4¹⁵⁄₁₆ /125	0°F/18°C	130°F/54°C

Note: Refer to Technical Manual for a full explanation of available program options.

Model 84511 Economy Timer for Single Stroke Pumps

Uses a timing motor, cam and Micro-Switch to turn pump off and on. NEMA 1 enclosure, UL and CSA listed. Switch capacity 10 amps non-inductive.

Off Time (Cycle Time)		On Time (Pumping Time)		Power Requirement	Approvals	Switch Capacity
Min.	Max.	Min.	Max.			
5 Min.	1 Hr.	30 Sec.	90 Sec.	120 VAC, 60Hz	UL, CSA	10 Amps

Enclosure			
Rating	Dimensions - in. / mm		
	Height	Width	Depth
NEMA 1	5 / 127	3¼ / 82.5	3½ / 89

Note: Off-time selectable in 5 minute intervals.

Model 84015 Timer-12-24V DC

Solid-state microprocessor-based controller for automated lubrication systems on mobile equipment or where AC power is not available.Rugged construction with liquid- and dust-tight enclosure. Includes manual push-button for remote initiation of a lube cycle.

Off Time** (Cycle Time)		Fixed On Time (Pumping Time)	Power Requirement	Switch Capacity
Min.	Max.			
2.5 Min.	80 Min.	75 Sec.	10-30 VDC 25 MA*	5 Amps

* Less load.
** Available selections are 2.5, 5, 10, 20, 40 or 80 minutes.

Enclosure				Ambient Operating Temperature Range	
Rating	Dimensions-in. / mm			Minimum	Maximum
	Height	Width	Depth		
NEMA 12	5¼ / 133	3⅛ / 79	3 / 76	0°F / -18°C	131°F / 55°C

Model 85530 Lubrication System Controller

Controls lubrication frequency, master divider valve cycle and monitors supply line pressure. The LCD displays operating status.

Lube Cycle				Max Count Rate*	Pumping Time Before Alarm	
Timer Mode Off Time		Counter Mode Off Counts			Minimum	Maximum
Min.	Max.	Min.	Max.			
1 Minute	99,000 Counts	1 Count	9,900 Minutes	30/Sec. @ 50% Duty Cycle	1 Minute	99 Minutes

* Minimum duration of count signal is 33 milliseconds.

Power Requirements (less load)		Pump, Solenoid, or Alarm Capacity	Ambient Temperature Range	Enclosure			
Voltage	Current			Rating	Dimensions-in. / mm		
					Height	Width	Depth
120 VAC, 50/60 Hz	85 MA	360 VA	32° to 122°F -0° to +50° C	NEMA 12	9 ½ 241	8 15/16 227	4⅛ 105
230 VAC, 50/60 HZ	45 MA						
24 VDC	250 MA	5 Amps					

Note: Model 85530 is CSA/NRTL approved.

Model 247333 Pressure Transducer

Pressure Transducer signals actual system pressure. Comes with 72 inch (1.8 m) shielded 24-gauge connecting wire. Maximum length of wire between transducer and monitor is 30 ft. (9.1 m).

Range	Accuracy	Proof	Pressure Connection	Ambient Temp.	Input	Voltage Output	Offset	Enclosure
0 to 4000 psi 276 bar	±1%	7500 psig 517 bar	¼" NPT Male Thread	-20° to 180° F -29° to 82° C	10 to 30 VDC	1-6 VDC	1 VDC	NEMA 4X Rating 300 Series Stainless Steel

Electric Solenoid-Operated Air Valves

Model	Type	Electrical Characteristics			Air Inlet/ Outlet	Ambient Temperature Range	Cv Factor	Max. Pressure psi/bar	Conduit Connection
		Power Requirements	Inrush Current Amps	Holding Current Amps					
350244	4-Way	110 VAC, 50 Hz 120 VAC, 60 Hz 8.4 VA	.11	.07	¼" NPT(F)	0° to 120°F -18° to 49°C	1.2	150 / 10.3	½" NPS(F)
350245		220 VAC, 50 Hz 240 VAC, 60 Hz 8.4 VA	.055	.035					
350241	3-Way	110 VAC, 50 Hz 120 VAC, 60 Hz 8.4 VA	.11	.07		0° to 140°F -18° to 60°C	.18		
350242		220 VAC, 50 Hz 240 VAC, 60 Hz 8.4 VA	.055	.035					
350282		12 VDC 6 Watts	N/A	N/A	⅛" NPT(F)				N/A
350283		24 VDC 6 Watts		N/A					
68586	2-Way	120V, 60 Hz 12 VA	.2	.1	⅜" NPT(F)		2.4		½" NPT(F)
274398	3-Way	24 VDC 8.5 Watts	N/A	N/A	¼" NPT(F)		.5		N/A
244727		110 VAC, 50 Hz 120 VAC, 60 Hz 11 VA	.12	.09	⅜" NPT(F)	0° to 120°F -18° to 49°C	4.4		½" NPT(F)

Model No.	Page No.
15104	19
67359	6
68586	26
68645	4, 5
69813-10	7
69813-12	7
69813-14	7
70224	23
83371	14
83671	14
83696	14
84015	25
84235	14
84239	19
84250	14
84252	14
84501	25
84511	25
84700	14
85530	26
85651	8
87026-03S	6
87026-03T	6
87026-05S	6
87026-05T	6
87026-08S	6
87026-08T	6
87026-10S	6
87026-10T	6
87026-12S	6
87026-12T	6
87026-15S	6
87026-15T	6
87028	6
87030-3	6
87030-4	6
87030-6	6
87070	8
87200	12, 13
87202	12, 13
87204	13
87212	15
87214	15
87216	12, 13
87218	13
87228	14, 16
87239	14, 16
87240	14, 16
87400	13
87402	14, 15
87403	14, 15
87405	15
87406	13, 14
87413	13
87414	14
87416	13, 14
87417	13, 14
87418	13, 14
87419	13, 14
87421	13
87423	13
87601	19
87617	8, 24
87618	8
87817	9
87818	9
87823	8
87824	8
87825	8
87828	8
87851	14
87852	14
87862	19
87865	8
87885	7
87886	7
87887	7
87888	7
87889	7
87895	7
87896	7
87897	7
87905	8
87915	7
87918	4
87919	4
87920	4
87934	7
87935	7
87936	7
87937	7
87938	7
87939	7
87940	7
87941	7
87942	7
87955	5
87956	5
87957	5
130021-3	9
130067	19
130095	13
130117	19
130179	12, 13
130200DEE	18
130200GEE	17
130200KEE	17
130201BCC	17
130280	12
130300GEE	18
130300KEE	18
130332	19
130335	19
236640	5
236641	5
236642	5
236643	5
236644	5
236645	5
244727	26
247333	26
249120	24
249122	24
249123	8
249124	8
249125	24
250001	24
250002	24
250010	24
250132	23
250286	9
250290	4
250291	4
250292	4
250293	4
250294	4
250295	4
250312	7
250313	7
274398	26
276517	23
350241	26
350242	26
350244	26
350245	26
350282	26
350283	26

Model No.	Page No.
360654	23
360675	9
632004	13
800019-5	20
800028-3	20
800031-3	21
800037-1,3,4	20
800059-1,2	22
800065-1	21
800066-2,3	21
800100-2	21
800118-2	21
800118-3	21
800131-5	20
800143-3	21
800289-4,5	21
800289-6	21
800376-2	21
800469-2	22
800621-4	22
800784-2	22
847400	22
874000	5
876061	5
876062	5
876091	5
876092	5
876121	5
876122	5
876123	5
876124	5
876181	5
876182	5
876183	5
876184	5
876241	5
876242	5
876243	5
876244	5
880015-9	9
880463	23
880466	23
880496	23
880511	9
880513	9
880514	9
880515	9
880517	9
880518-9	9
880519-9	9
880550	20
880551	20
880552	20
880553	20
880554	20
880555	23
880556	23
880560	20
880561	20
882051	4
882052	4
882101	4
882102	4
882151	4
882152	4
882201	4
882202	4
882203	4
882204	4
882251	4
882252	4
882253	4
882254	4
882301	4
882302	4
882303	4
882304	4
882351	4
882352	4
882353	4
882354	4
882401	4
882402	4
882403	4
882404	4

A complete line of lubrication solutions and industrial pumping products

Automatic lubrication
Our automatic systems dispense measured amounts of lubricant at predetermined intervals. Systems include Helios and Duo-Matic™ two-line systems, and Centro-Matic, Modular Lube, Quicklub and ORSCO precision oil lubrication. With our BearingSaver program, we find the best automatic solution for you from our wide range of systems for grease, fluid grease and oil.

General lubrication
Sometimes a simple approach is the best solution. Our wide range of products includes smaller, self-contained automatic lubricators and general lubrication equipment.

Industrial pumping
Lincoln has developed specialized pumps and pumping stations to handle the difficult job of transferring thick fluids. From the industry-best PileDriver III and PowerMaster III pumps and air motors to specialty pumps, controls and mounting accessories, Lincoln is the preferred pumping system for many tough applications.

® SKF is a registered trademark of the SKF Group.

® Lincoln, Modular Lube, Bearing Saver, Helios, Centro-Matic, Quicklub, PileDriver III and PowerMaster III are registered trademarks of Lincoln Industrial Corp.

© SKF Group 2014
The contents of this publication are the copyright of the publisher and may not be reproduced (even extracts) unless prior written permission is granted. Every care has been taken to ensure the accuracy of the information contained in this publication but no liability can be accepted for any loss or damage whether direct, indirect or consequential arising out of the use of the information contained herein.

March 2014 · **FORM 442834**

skf.com