Lincoln Centro-Matic automatic lubrication systems

LINCOLN

People, capabilities and systems to save money and increase productivity

We're the largest and most successful company in our field because we continually satisfy our customers with the world's best lubrication and pumping systems. For more than a century, companies have relied on our technical and quality leadership, our world-class manufacturing and customer service, and our vast network of distributors and support facilities.

Lincoln develops new products and systems at research and development facilities in the U.S., Germany and India that provide global and regional application solutions.

We have solutions for large processing plants, automotive manufacturing, pulp and paper mills, and food and beverage facilities. Virtually every industrial professional involved in operations and maintenance can benefit from Lincoln systems.

On the road or in the field, Lincoln protects heavy equipment used in mining, construction, agriculture and over-the-road trucking. The world's leading manufacturers offer our systems as standard equipment or factory options.

Lincoln builds precision metal components, state-of-the-art electronic controls, and the industry's top-performing pump systems. Our quality systems in the United States and Germany are ISO 9001 registered.

With five technical support centers on three continents, and a network of systems houses and distributors supported by regional sales and service offices, our customers can always draw on our worldwide resources.

To make sure your investment results in significant savings, Lincoln developed a unique program called BearingSaver®. You not only get a complete audit of your facility, you also receive an analysis of your return on investment.

LINCOLN

SKF

Table of Contents

Introduction to Centro-Matic® 2
Grease Injectors 5
Oil Injectors 12
Metric Injectors 16
Injector Accessories 17
FlowMaster® II Pump 19
Reservoir Level Sensor, Overflow Prevention System 21
Hydraulic Lubrication Systems - Hammer Pumps 23
P653S Electric Pump 25
P603S Pump. 28
Manual Grease Pumps 30
Air-Operated (Single Stroke) Grease Pumps 31
Air-Operated (Reciprocating) Grease Pumps. 33
Electric Grease Pumps 35
Manually Operated Oil Pumps 35
Air-Operated (Single Stroke) Oil Pumps. 36
Air-Operated (Reciprocating) Oil Pumps 37
Electric-Operated Oil Pumps 38
Bucket Pumps 39
FlowMaster® Hydraulic Pump 40
FlowMaster® Electric Pumps. 42
Hydraulic-Powered Grease Pumps 46
Airless Spray System 47
Pump Accessories 49
System Controls 52
Numerical Index. 57

Centro-Matic® Automatic Lubrication Systems
Introduction

Lincoln Centro-Matic® systems and components are made to match your application. Systems can service one machine, different zones on one machine or even several separate machines. Regardless of the application, the principle of centralized lubrication remains the same: a central pump station automatically delivers lubricant through a single supply line to the injectors. Each injector serves only one lubrication point and may be accurately adjusted to deliver the precise amount of grease or oil required. Centro-Matic systems give you multiple advantages over other designs.

Simplicity

Systems are easy to understand, install and maintain. You realize savings right from the start because one lubricant supply line means lower installation costs.

Powerful Pumping Unit

Centro-Matic systems dispense either grease or oil in measured quantities, unaffected by normal temperature or viscosity changes. For large systems, Lincoln's single-line design and powerful pumps mean injectors can be located long distances from original refinery containers or bulk lubricant tanks.

External Adjustment

Lubricant injectors are externally adjustable without special tools so each bearing can receive the correct amount of lubricant. No under- or over-lubrication at individual points.

Visual Indicators

Each injector incorporates an indicator pin that gives visual confirmation the injector is operating correctly. When necessary, troubleshooting is the simple process of checking indicator pins.

Ease of Service

When injectors finally need service, the job is quick and easy. No need to remove supply line connections or disturb adjacent injectors. Replacement can usually be done between lubrication cycles, so there's almost no lubricant loss or downtime.

Parts and Service

You're never far from a Lincoln authorized distributor. Qualified distributors offer design engineering, startup help and training for your personnel in the use and maintenance of Centro-Matic systems. They'll back you up with parts and service for years after the sale.

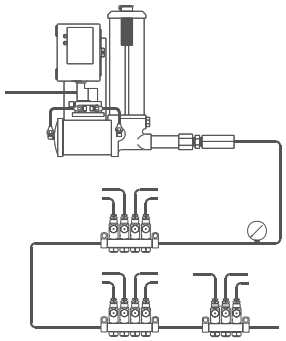

Air-Operated

Actuated automatically by compressed air at various pre-determined intervals. An air-operated pump delivers lubricant to the injectors. When all injectors have cycled, the pump shuts off automatically and vents lubricant pressure. Available with automatic, manual or mechanical controls.

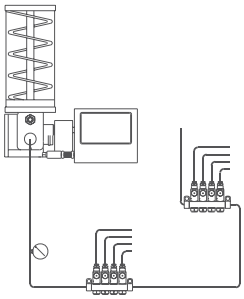

Electric

Used where compressed air is not available, or electrical operation is preferred. Totally enclosed motor supplies the power requirements of the pumping mechanism. Time control is adjustable to provide predetermined frequency of lubrication.

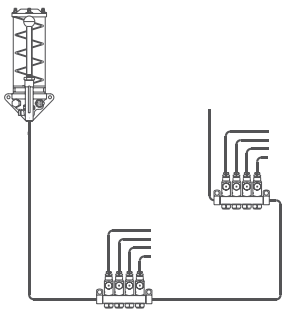

Manual

Designed for smaller, individual machines, manual systems provide a low-cost, efficient method of distributing lubricant to the injectors. Cycling a complete bank of injectors takes only a few seconds. In manually operated systems, the lubricant pump is hand-operated and the machine operator performs the lubrication intervals.

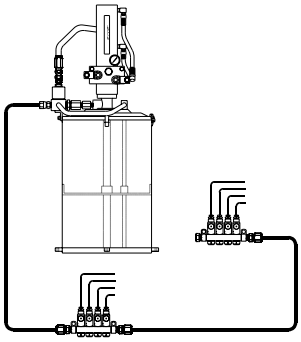

Hydraulic

A complete hydraulically-powered pumping unit for centralized lubrication of individual machines. Usually installed on machinery such as coal mining and earth moving equipment which utilize a hydraulic pressure system. The frequency of the lubrication cycle can be set manually or by mechanical or automatic controls.

Basic Operating Principles of Centro-Matic® Injectors

Each Lincoln Centro-Matic injector can be manually adjusted to discharge the precise amount of lubricant each bearing needs. Injectors are mounted singly at each bearing, or grouped in a manifold with feedlines supplying lubricant to the bearings. In each case, injectors are supplied with lubricant under pump pressure through a single supply line. Two injector types are available: a top adjusting and a side adjusting. Both types can be used in the same circuit; their selection is made on the basis of bearing lubricant requirements.

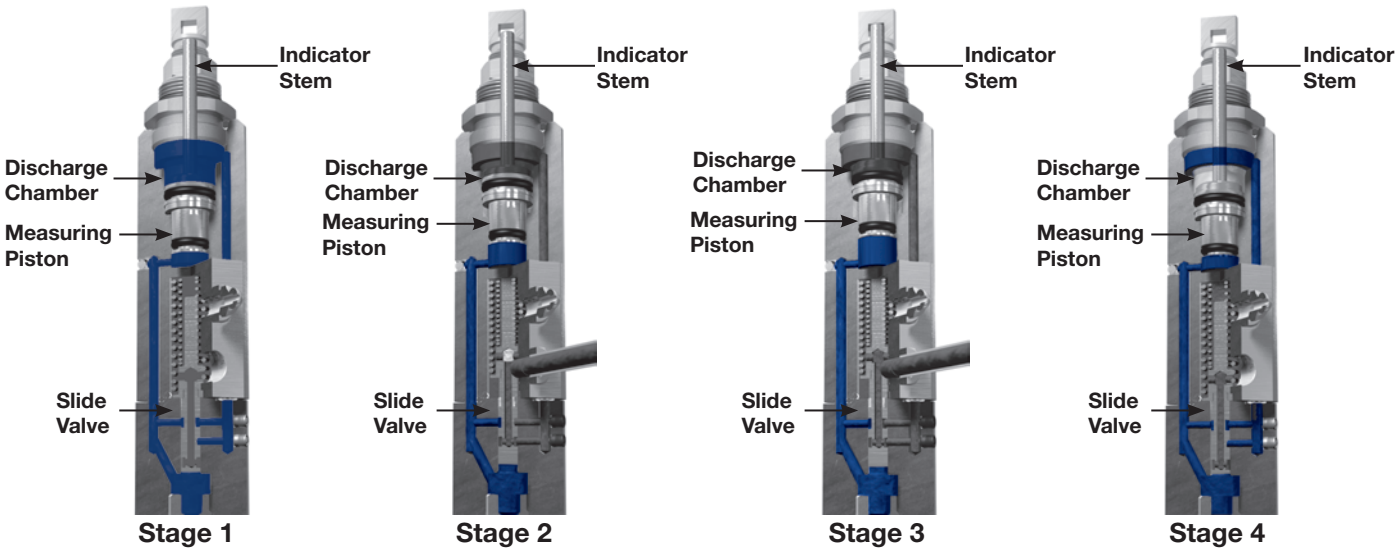

SL-V, SL-V XL

Stage 1—The discharge chamber is filled with lubricant from the previous cycle. Under pressure of incoming lubricant, lubricant is directed to both sides of the measuring piston through the slide valve. The port to the bearing is closed in this position which prevents the measuring piston from moving. The indicator stem will be at its innermost position, having pulled away from the stop in the adjusting screw.

Stage 2—Pressure has built up and has moved the slide valve in position shown. This closes the flow passage to the upper side of the piston (larger diameter) while simultaneously opening the port to allow lubricant to flow out of the injector to the bearing. Pressure from the supply line continues to apply pressure to the lower portion of the measuring piston, which causes a pressure difference across the measuring piston thus allowing it to move upward.

Stage 3—Movement of the measuring piston is shown caused by the pressure on the lower side of the measuring piston dispensing lubricant out to the bearing. The indicator stem will move up against the stop in the adjusting screw when all lubricant has been delivered to the bearing.

Stage 4—As the pressure in the supply line is vented down to 1,000 psi, the slide valve moves back to its rest position. Flow of lubricant to the bearing is closed and simultaneously allows lubricant to flow to the upper (larger diameter) of the piston. The displacement of fluid on the lower side of the measuring chamber is also allowed by the slide valve to flow to the upper side of the piston. The injector is recharged by the residual pressure in the supply line to the upper portion of the measuring chamber.

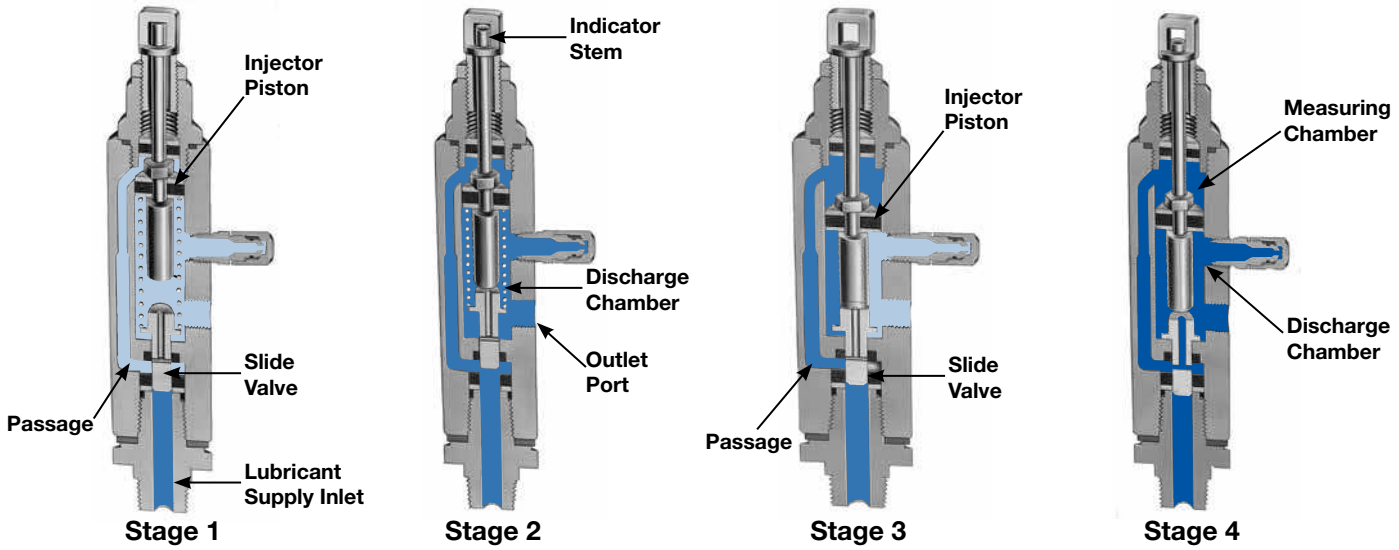

SL-1, -11, -41, -44

Stage 1—The injector piston is in its normal, or rest position. The discharge chamber is filled with lubricant from the previous cycle. Under the pressure of incoming lubricant, the slide valve is about to open the passage leading to the piston.

Stage 2—When the slide valve uncovers the passage, lubricant is admitted to the top of the piston, forcing the piston down. The piston forces lubricant from the discharge chamber through the outlet port to the bearing.

Stage 3—As the piston completes its stroke, it pushes the slide valve past the passage, cutting off further admission of lubricant to the passage. Piston and slide valve remain in this position until lubricant pressure in the supply line is vented (relieved) at the pump.

Stage 4—After pressure is relieved, the compressed spring moves the slide valve to the closed position. This opens the port from the measuring chamber and permits the lubricant to be transferred from the top of the piston to the discharge chamber.

SL-32, -33, -42, -43

Stage 1—Incoming lubricant, under pressure from the supply line, moves the injector piston forward. The piston forces a pre-charge of lubricant from the discharge chamber through the outlet check valve to the feed line.

Stage 2—When the system is vented (pressure relieved), the piston returns to the rest position, transferring lubricant from the measuring chamber to the discharge chamber.

Applications—When it comes to eliminating costly, manual point-by-point lubrication, Centro-Matic systems have proven to be the right solution for many industries and applications. Examples include:

- Paper Converting
- Plastic Processing
- Wood Processing
- Printing
- Packaging
- Textile
- Food & Beverage
- Metalworking
- Material Handling Equipment

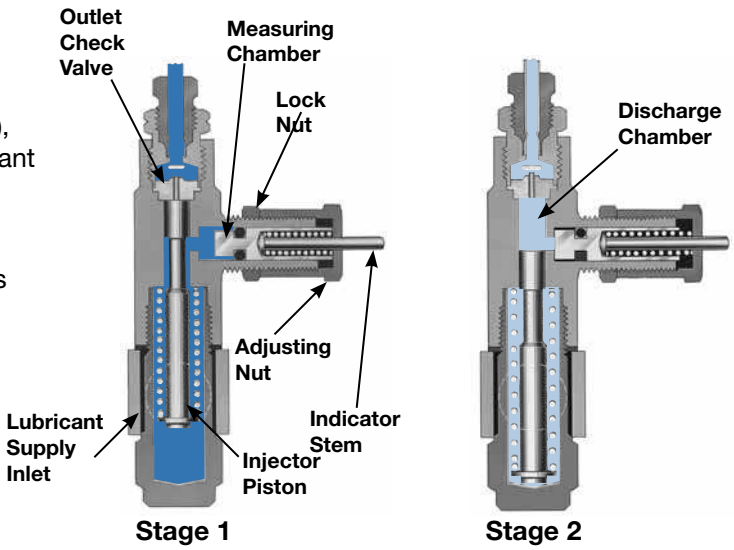

Series SL-33

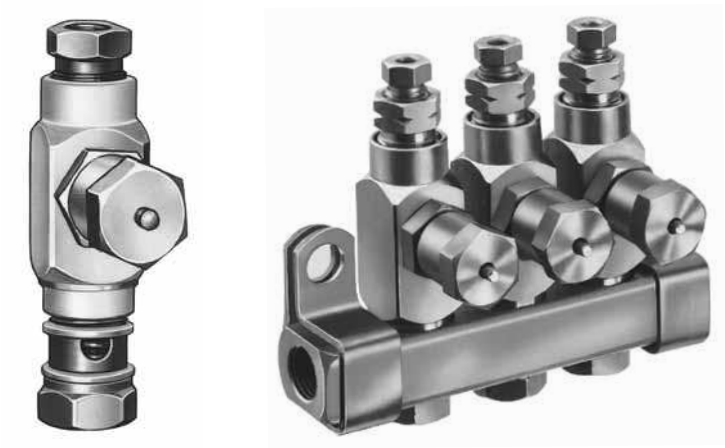

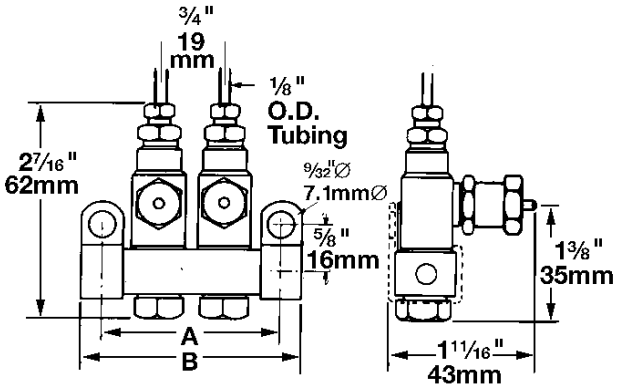

- For single-line, high-pressure central lubrication system.
- For dispensing petroleum-based lubricants with a viscosity up to NLGI No. 2 (refer to Design Guide).
- Output is externally adjustable.
- Indicator stem permits visual check of injector operation.
- May be combined in a circuit of Injectors SL-32, SL-V, SL-V XL, SL-1 and/or SL-11.
- Individual injectors can be easily removed for inspection or replacement.
- Available in stainless steel SAE 304, for application where environmental conditions are hazardous to carbon steel or in industries preferring stainless steel.

Specifications:

Series	Output		Operating Pressure			
	Min.	Max.	Min.	Max.	Typical	Vent
SL-33	.001 cu. in. .016 cc	.003 cu. in. .049 cc	1200 psig 83 bar	3500 psig 241 bar	1500 psig 103 bar	200 psig 14 bar

Model		Number of Outlets	Connections		Dimensions			
Carbon Steel	Stainless Steel (304)		Manifold Inlet	Injector Outlet	A in.	A mm	B in.	B mm
83309-1	83715-1	1	⅛" NPTF (F)	⅛" O.D. Tube	1⅛	29	1⅝	41
83309-2	83715-2	2			1⅞	48	2⅜	60
83309-3	83715-3	3			2⅝	67	3⅛	79
83309-4	83715-4	4			3⅜	86	3⅞	98
83309-5	—	5			4⅛	105	4⅝	117
83309-6	83715-6	6			4⅞	124	5⅜	137
—	83715-7	7			5⅝	143	6⅛	156
83900	83900-9	1	⅛" NPTF (M)		Single Injector/No Manifold			
83314	83314-9	—	—		Single Replacement Injector			

Notes:
1. Injectors, except replacement injectors for manifold, include compression nut and ferrule for tubing — 1/8" O.D. as standard. Other outlet connectors for feed line optional.
2. Injectors with manifolds include two mounting clips and screws.
3. Injectors have Nitrile packings (200°F max. / 93°C). Check packing compatibility with synthetic lubricants.
4. Output with indicator cap hand-tightened is .001 cu. in. Maximum output is achieved with two turns at .001 cu. in./turn.

Series SL-32

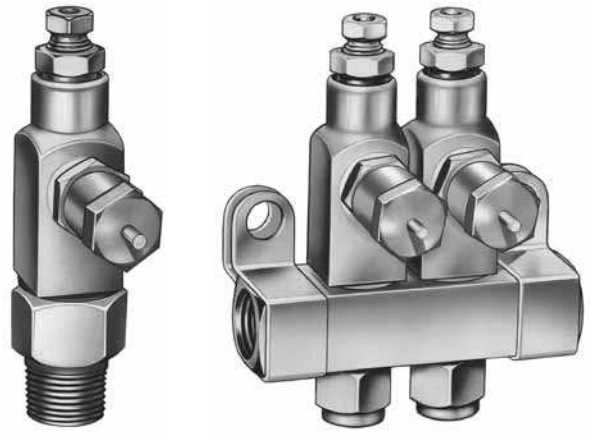

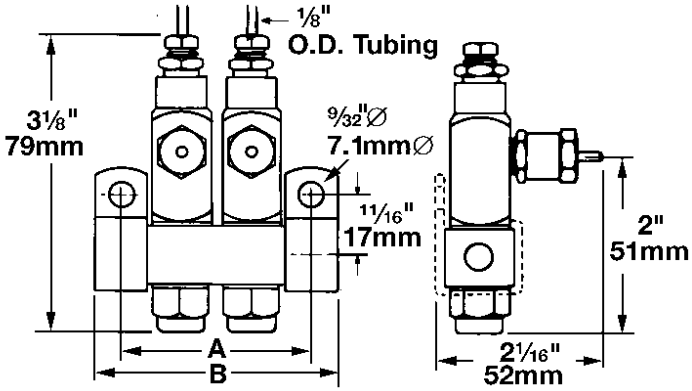

- For single-line, high-pressure central lubrication system.
- For dispensing petroleum-based lubricants with a viscosity up to NLGI No.2 (refer to Design Guide).
- Output is externally adjustable.
- Indicator stem permits visual check of injector operation.
- May be combined in a circuit of injectors SL-33, SL-V, SL-V XL, SL-1 and/or SL-11.
- Individual injectors can be easily removed for inspection or replacement.
- Available in stainless steel SAE 304, for application where environmental conditions are hazardous to carbon steel or in industries preferring stainless steel.

Specifications:

Series	Output		Operating Pressure			
	Min.	Max.	Min.	Max.	Typical	Vent
SL-32	.001 cu. in. .016 cc	.008 cu. in. .131 cc	1200 psig 83 bar	3500 psig 241 bar	1500 psig 103 bar	200 psig 14 bar

Model		Number of Outlets	Connections		Dimensions			
Carbon Steel	Stainless Steel (304)		Manifold Inlet	Injector Outlet	A in.	A mm	B in.	B mm
83336-1	83724-1	1	¼" NPTF (F)	⅛" O.D. Tube	1¼	32	1¾	44
83336-2	83724-2	2			2	51	2½	63
83336-3	83724-3	3			2¾	70	3¼	82
83336-4	83724-4	4			3½	89	4	101
83338	—	1	¼" NPTF (M)		Single Injector/No Manifold			
83337	83337-9	—	—		Single Replacement Injector			

Notes:
1. Injectors, except replacement injectors for manifold, include compression nut and ferrule for tubing — 1/8" O.D. as standard. Other outlet connectors for feed line optional.
2. Injectors with manifolds include two mounting clips and screws.
3. Injectors have Nitrile packings (200°F max. / 93°C). Check packing compatibility with synthetic lubricants.
4. Output with indicator cap hand-tightened is .001 cu. in. Maximum output is achieved with five turns at .0014 cu. in./turn.

Series SL-32HV High Venting - NEW

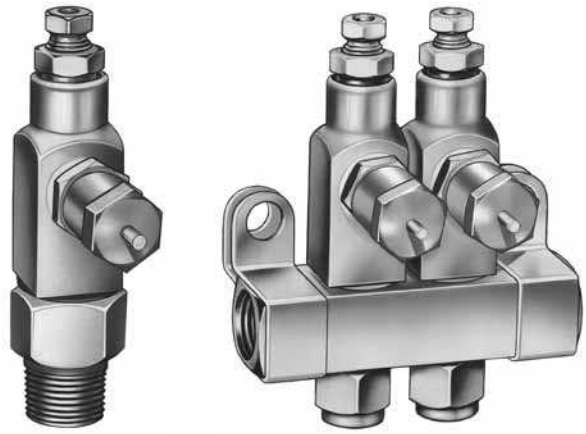

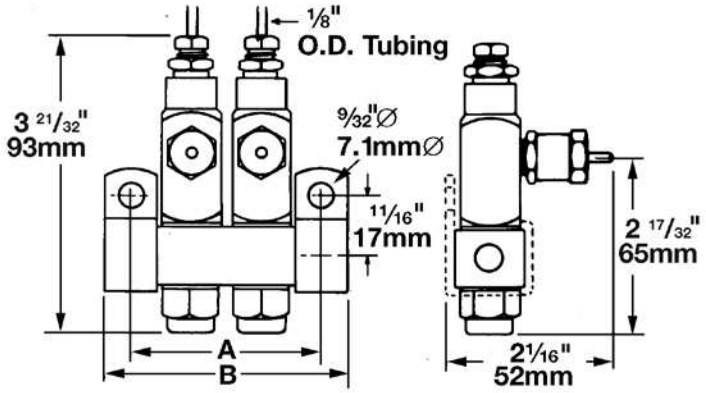

- For single-line, high-pressure central lubrication system.
- For dispensing petroleum-based lubricants with a viscosity up to NLGI No.2 (refer to Design Guide).
- Output is externally adjustable.
- Indicator stem permits visual check of injector operation.
- May be combined in a circuit of injectors SL-33, SL-V, SL-V XL, SL-1 and/or SL-11.
- Individual injectors can be easily removed for inspection or replacement.

Specifications:

Series	Output		Operating Pressure			
	Min.	Max.	Min.	Max.	Typical	Vent
SL-32HV	.001 cu. in. .016 cc	.008 cu. in. .131 cc	1200 psig 83 bar	3500 psig 241 bar	1500 psig 103 bar	400 psig 28 bar

Model	Number of Outlets	Connections		Dimensions			
Carbon Steel		Manifold Inlet	Injector Outlet	A in.	A mm	B in.	B mm
83336HV-1	1	¼" NPTF (F)	⅛" O.D. Tube	1¼	32	1¾	44
83336HV-2	2			2	51	2½	63
83336HV-3	3			2¾	70	3¼	82
83336HV-4	4			3½	89	4	101
83336HV-5	5			4¼	108	4¾	120
83336HV-6	6			5	127	5½	139
83336HV-7	7			5¾	146	6¼	158
83336HV-8	8			6½	165	7	177
83336HV-9	9			7¼	184	7¾	196
83336HV-10	10			8	203	8½	215
83338HV	1	¼" NPTF (M)		Single Injector/No Manifold			
83337HV	—	—		Single Replacement Injector			

Notes:
1. Injectors, except replacement injectors for manifold, include compression nut and ferrule for tubing — 1/8" O.D. as standard. Other outlet connectors for feed line optional.
2. Injectors with manifolds include two mounting clips and screws.
3. Injectors have Nitrile packings (200°F max. / 93°C). Check packing compatibility with synthetic lubricants.
4. Output with indicator cap hand-tightened is .001 cu. in. Maximum output is achieved with five turns at .0014 cu. in./turn.

Series SL-V

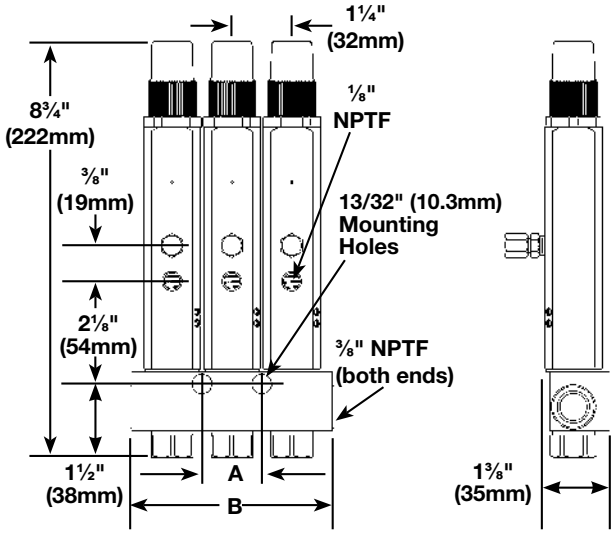

- For single-line, high-pressure central lubrication system.
- For dispensing lubricants compatible with polyurethane seals up to NLGI No. 2 (refer to Design Guide).
- Output is externally adjustable.
- Indicator stem permits visual check of injector operation.
- May be combined in a circuit of injectors SL-32, SL-33, SL-1, SL-V XL and/or SL-11.
- Individual injectors can be easily removed for inspection or replacement.
- Each SL-V injector includes a clear polycarbonate protective cap.

Specifications:

Series	Material	Output		Operating Pressure				Connections	
		Min.	Max.	Min.	Max.	Typical	Vent	Manifold Inlet	Injector Outlet
SL-V	Carbon Steel	0.015 cu. in. 0.25 cc	0.08 cu. in. 1.31 cc	1850 psig 128 bar	6000 psig 413 bar	2500 psig 172 bar	1000 psig 60 bar	⅜" NPTF (F)	⅛" NPTF (F)

Model	Type	Number of Outlets	Dimension			
			A in.	A mm	B in.	B mm
85770-1	One Injector Manifold	1	Single Mounting Hole		2½	63
85770-2	Two Injector Manifold	2			3	76
85770-3	Three Injector Manifold	3	1¼	32	4¼	108
85770-4	Four Injector Manifold	4	2	63	5½	140
85770-5	Five Injector Manifold	5	3¾	95	6¾	171
85770-6	Six Injector Manifold	6	5	127	8	203
85771	Replacement for manifold injectors					
85772	Single injector/no manifold (⅜" NPTF(M) inlet)					

Notes:
1. Injector manifolds have 13⁄32" (10.3 mm) dia. mounting holes for 3⁄8" bolt.
2. Injectors have polyurethane seals Check compatibility with synthetic lubricants.
3. Injector rated for 180°F (80°C) max. ambient temperature, depending on lubricant used.
4. Injectors include fitting for filling feedlines via alternate outlet port.
5. Output with adjustment screw hand-tightened is .015 cu. in. Maximum output is achieved with five turns at .014 cu. in./turn.

Series SL-V XL High-Output

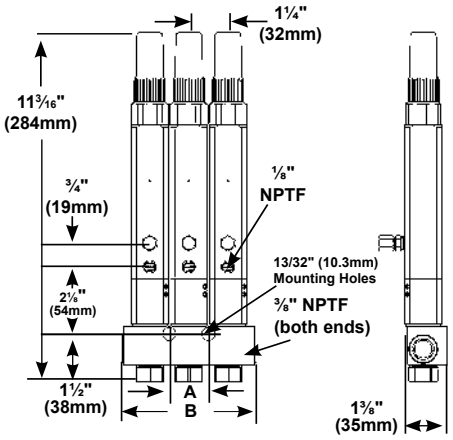

- For single-line, high-pressure central lubrication system.
- For dispensing lubricants compatible with polyurethane seals up to NLGI No. 2 (refer to Design Guide).
- Output is externally adjustable.
- Indicator stem permits visual check of injector operation.
- May be combined in a circuit of injectors SL-32, SL-33, SL-1, SL-V and/or SL-11.
- Individual injectors can be easily removed for inspection or replacement.
- Two SL-V XL injectors are required to replace one SL-11 injector.
- Each SL-V XL injector includes a clear polycarbonate protective cap.

Specifications:

Series	Material	Output		Operating Pressure				Connections	
		Min.	Max.	Min.	Max.	Typical	Vent	Manifold Inlet	Injector Outlet
SL-V XL	Carbon Steel	0.015 cu. in. 0.25 cc	0.305 cu. in. 5.00 cc	1850 psig 128 bar	6000 psig 413 bar	2500 psig 172 bar	1000 psig 69 bar	⅜" NPTF (F)	⅛" NPTF (F)

Model	Type	Number of Outlets	A in.	A mm	B in.	B mm
85780-1	One Injector Manifold	1	Single Mounting Hole		2½	63
85780-2	Two Injector Manifold	2			3	76
85780-3	Three Injector Manifold	3	1¼	32	4¼	108
85780-4	Four Injector Manifold	4	2½	63	5½	140
85780-5	Five Injector Manifold	5	3¾	95	6¾	171
85780-6	Six Injector Manifold	6	5	127	8	203
85781	Replacement for manifold injectors					
85782	Single injector/no manifold (⅜" NPTF(M) inlet)					

Spectrum Adjustment Sleeves:

Model Number (10/bag only)	Output in³ (cc)	Ratio from Maximum Output	Ratio from Minimum Output	Sleeve Color
N/A	0.015 (0.25)	0.05	1	NA
85785-1	0.030 (0.50)	0.10	2	red
85785-2	0.045 (0.75)	0.15	3	silver
85785-3	0.060 (1.00)	0.20	4	gold
85785-4	0.075 (1.25)	0.25	5	green
85785-5	0.113 (1.88)	0.37	7.5	black
85785-6	0.150 (2.50)	0.50	10	purple
85785-7	0.188 (3.13)	0.62	12.5	blue
85785-8	0.225 (3.75)	0.75	15	orange
85785-9	0.263 (4.38)	0.87	17.5	brown
85785-10	0.300 (5.00)	1.00	20	yellow

Notes:
1. Injector manifolds have 13/32" (10.3 mm) dia.mounting holes for 3/8" bolt.
2. Injectors have polyurethane seals Check compatibility with synthetic lubricants.
3. Injector rated for 180°F (80°C) max. ambient temperature, depending on lubricant used.
4. Injectors include fitting for filling feedlines via alternate outlet port.
5. Output with adjustment screw handtightened is .015 cu. in. Maximum output is achieved with 20½ turns at .014 cu. in./turn.

Series SL-1

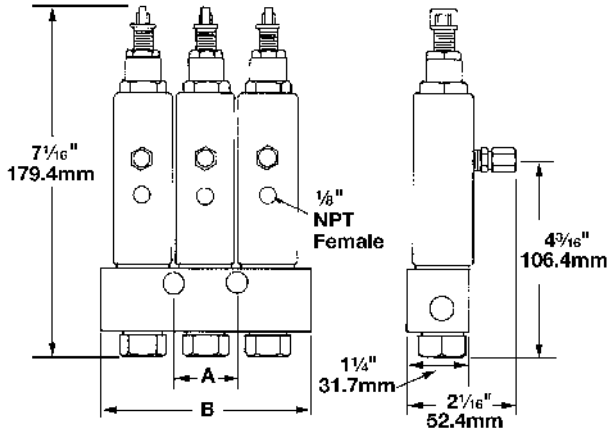

- For single-line, high-pressure central lubrication system.
- For dispensing lubricants compatible with flouroelastomer packings and viscosity up to NLGI No. 2 (refer to Design Guide).
- Output is externally adjustable.
- Indicator stem permits visual check of injector operation.
- May be combined in a circuit of injectors SL-32, SL-33, SL-V, SL-V XL and/or SL-11.
- Individual injectors can be easily removed for inspection or replacement.
- Available in stainless steel SAE 316, for application where environmental conditions are hazardous to carbon steel or in industries preferring stainless steel.

Specifications:

Series	Output		Operating Pressure				Connections	
	Min.	Max.	Min.	Max.	Typical	Vent	Manifold Inlet	Injector Outlet
SL-1	.008 cu. in. .131 cc	.080 cu. in. 1.31 cc	1850 psig 127 bar	3500 psig 241 bar	2500 psig 172 bar	600 psig 41 bar	3/8" NPTF (F)	1/8" NPTF (F)

Model		Number of Outlets	Dimensions			
Carbon Steel	Stainless Steel 316)		A in.	A mm	B in.	B mm
81770-1	239351* One Injector Manifold	1	Single Mounting Hole		2 1/2	63
81770-2	239352* Two Injector Manifold	2			3	76
81770-3	239353* Three Injector Manifold	3	1 1/4	32	4 1/4	108
81770-4	239354* Four Injector Manifold	4	2 1/2	63	5 1/2	140
81770-5	239355* Five Injector Manifold	5	3 3/4	95	6 3/4	171
81770-6	—	6	5	23	8	203
81713	—	Single injector/no manifold, [3/8" NPTF (M) inlet]				
81713A	84776* Injector	Replacement for manifolded injectors				

* For complete assembly, you must order stainless steel manifold and corresponding quantity of Model #84776 Injectors separately.

Notes:
1. Injector manifolds have 13/32" (10.3mm) dia.mounting holes for 3/8" bolt.
2. Injectors have flouroelastomer packings. Check compatibility with synthetic lubricants.
3. Injector rated for 350°F (176°C) max. ambient temperature, depending on lubricant used.
4. Injectors include fitting for filling feedlines via alternate outlet port.
5. Output with adjustment screw hand-tightened is .009 cu. in. Maximum output is achieved with eight turns at .009 cu. in./turn.

Series SL-11

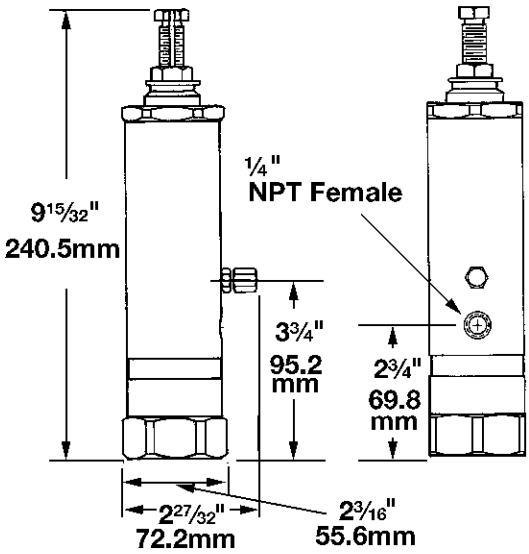

- For single-line, high-pressure central lubrication system.
- For dispensing lubricants compatible with flouroelastomer packings and viscosity up to NLGI No. 2 (refer to Design Guide).
- Output is externally adjustable.
- Indicator stem permits visual check of injector operation.
- May be combined in a circuit of injectors SL-32, SL-33, SL-V, SL-V XL and/or SL-1.
- Available only as single unit with ½" NPTF Female inlet.

Specifications:

Series	Output		Operating Pressure			
	Min.	Max.	Min.	Max.	Typical	Vent
SL-11	.050 cu. in. .82 cc	.500 cu. in. 8.2 cc	1000 psig 69 bar	3500 psig 241 bar	2500 psig 172 bar	800 psig 55 bar

Carbon Steel	Number of Outlets	Connections	
		Inlet	Outlet
85497	1	½" NPTF (F)	¼" NPTF (F)

Notes:
1. Injectors have flouroelastomer packings. Check packing compatibility with synthetic lubricants.
2. Injector rated for 350°F (176°C) max. ambient temperature.
3. Injectors supplied with fitting for filling feed line via alternate outlet port.
4. Output with adjustment screw hand-tightened is .05 cu. in. Maximum output is achieved with 11½ turns at .040 cu. in./turn.

Series SL-42

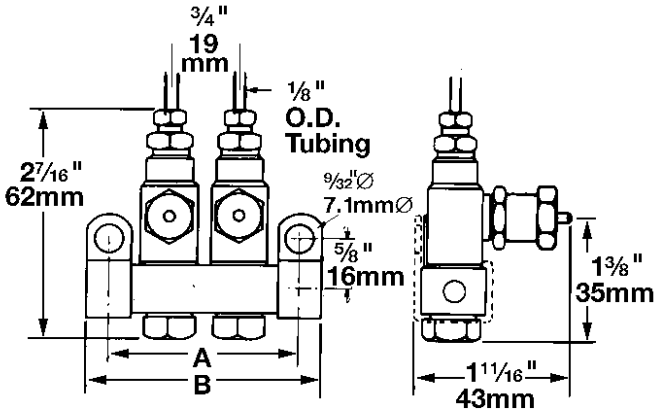

- For single-line central lubrication system.
- For dispensing fluid or semi-fluid lubricants.
- Output is externally adjustable.
- Indicator stem permits visual check of injector operation.
- May be combined in a circuit of injectors SL-43, SL-41 and/or SL-44.
- Individual injectors can be easily removed for inspection or replacement.
- Carbon steel injectors with Nitrile or flouroelastomer packings.
- Injectors with flouroelastomer packings are used for heat resistant applications or when lubricant to be dispensed requires flouroelastomer packings for compatibility (indicated by black adjustment caps).

Specifications:

Series	Output		Operating Pressure			
	Min.	Max.	Min.	Max.	Typical	Vent
SL-42	.001 cu. in. .016 cc	.003 cu. in. .049 cc	750 psig 52 bar	1000 psig 69 bar	850 psig 59 bar	150 psig 10 bar

Model		Number of Outlets	Connections		Dimensions			
Standard	Heat Resistant		Manifold/ Injector Inlet	Injector Outlet	A in.	A mm	B in.	B mm
83311-1	84428-1	1	⅛" NPTF (F)	⅛" O.D. Tube Connection	1⅛	29	1⅝	41
83311-2	84428-2	2			1⅞	48	2⅜	60
83311-3	84428-3	3			2⅝	67	3⅛	79
83311-4	84428-4	4			3⅜	86	3⅞	98
83311-5	84428-5	5			4⅛	105	4⅝	117
83311-6	84428-6	6			4⅞	124	5⅜	137
83311-10	84428-10	10			7⅞	200	8⅜	213
83311-15	84428-15	15			11⅞	295	12⅛	308
83535	—	1	⅛" NPTF (M)		Single Injector/No Manifold			
83313	84048	—	—		Replacement for Manifold Injectors			

Notes:
1. Injectors, except replacement injectors for manifold, include compression nut and ferrule for tubing – 1/8" O.D. as standard. Other outlet connectors for feed line optional.
2. Injectors with manifolds include two mounting clips and screws.
3. Standard injectors have Nitrile packings (200°F/93°C max.); Heat Resistant injectors have flouroelastomer packings (350°F/176°C max., depending on lubricant used) and black adjusting cap. Check packing compatibility with synthetic lubricants.
4. Output with indicator cap hand-tightened is .001 cu. in. Maximum output is achieved with two turns at .001 cu. in./turn.

Series SL-43

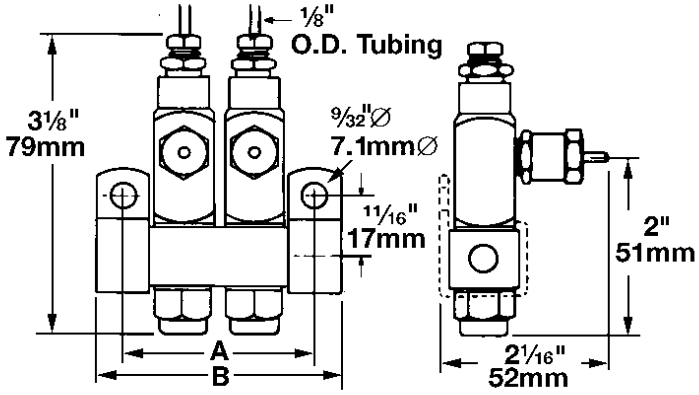

- For single-line central lubrication system.
- For dispensing fluids or semi-fluid lubricants.
- Output is externally adjustable.
- Indicator stem permits visual check of injector operation.
- May be combined in a circuit of injectors SL-42, SL-41 and/or SL-44.
- Individual injectors can be easily removed for inspection or replacement.
- Carbon steel injectors with Nitrile or flouroelastomer packings.
- Injectors with flouroelastomer packings are used for heat resistant applications or when lubricant to be dispensed requires flouroelastomer packings for compatibility (indicated by black adjustment caps).

Specifications:

Series	Output		Operating Pressure			
	Min.	Max.	Min.	Max.	Typical	Vent
SL-43	.001 cu. in. .016 cc	.008 cu. in. .131 cc	750 psig 52 bar	1000 psig 69 bar	850 psig 59 bar	150 psig 10 bar

Model		Number of Outlets	Connections		Dimensions			
Carbon Steel								
Standard	Heat Resistant		Manifold/ Injector Inlet	Injector Outlet	A in.	A mm	B in.	B mm
83661-1	84429-1	1	¼" NPTF (F)	⅛" O.D. Tube Connection	1¼	32	1¾	44
83661-2	84429-2	2			2	51	2½	63
83661-3	84429-3	3			2¾	70	3¼	83
83661-4	84429-4	4			3½	89	4	102
83660	84110	—	—		Replacement for Manifold Injectors			

Notes:
1. Injectors, except replacement injectors for manifold, include compression nut and ferrule for tubing – 1/8" O.D. as standard. Other outlet connectors for feed line optional.
2. Injectors with manifolds include two mounting clips and screws.
3. Standard injectors have Nitrile packings (200°F/93°C max.)
4. Heat Resistant injectors have flouroelastomer packings (350°F/176°C max. depending on lubricant used) and Black Adjusting Cap.
5. Check packing compatibility with synthetic lubricants.
6. Output with indicator cap hand-tightened is .001 cu. in. Maximum output is achieved with five turns at .0014 cu. in./turn.

Series SL-41

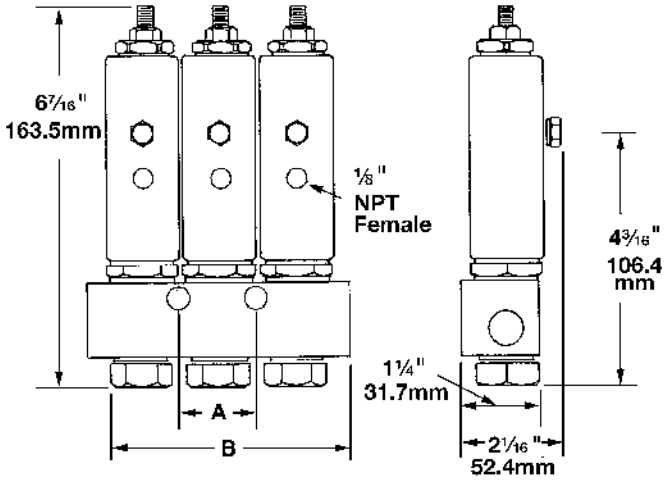

- SL-41 series injectors are designed for use in high temperature applications up to 350°F (176°C), depending on lubricant.
- Available installed only in manifolds with ⅜" NPT female inlet.
- Injectors feature a tamper-resistant adjustment screw which does not incorporate a visual indicator.
- May be combined in a circuit of injectors SL-42, SL-43 and SL-44.

Specifications:

Series	Output		Operating Pressure			
	Min.	Max.	Min.	Max.	Typical	Vent
SL-41	.008 cu. in. .131 cc	.080 cu. in. 1.31 cc	750 psig 52 bar	1000 psig 69 bar	850 psig 59 bar	150 psig 10 bar

Model	Number of Outlets	Connections		Dimensions			
Carbon Steel		Manifold/ Injector Inlet	Injector Outlet	A in.	A mm	B in.	B mm
82294-1	1	⅜" NPTF (F)	⅛" NPTF (F)	Single Hole Mounting	Single Hole Mounting	2½	63
82294-2	2					3	76
82294-3	3			1¼	32	4¼	108
82294-4	4			2½	63	5½	140
82294-5	5			3¾	95	6¾	171
82292		Single Injector/No Manifold, [⅜" NPTF (M) Inlet]					
82295	—	—	⅛" NPTF (F)	Replacement for Manifold Injectors			

Notes:
1. Injector manifolds have 13/32" (10.3 mm) mounting holes for 3/8" bolt.
2. Output with adjustment screw hand-tightened is .008 cu. in. Maximum output is achieved with 12 turns at .006 cu. in./turn.

Series SL-44

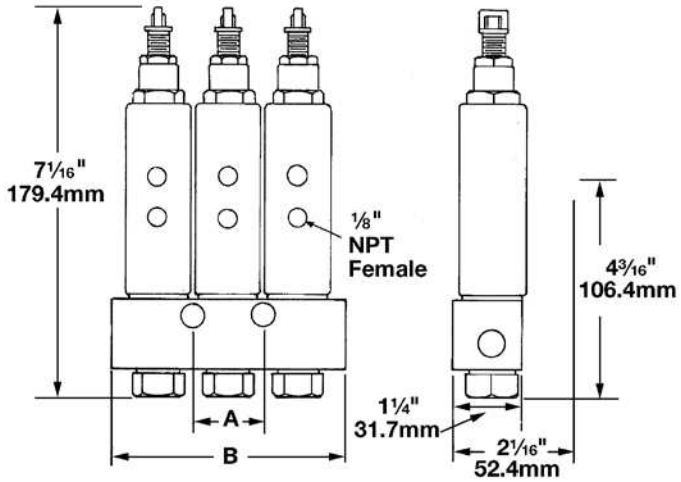

- For single-line central lubrication system.
- For dispensing fluid or semi-fluid lubricants.
- Output is externally adjustable.
- Indicator stem permits visual check of injector operation.
- May be combined in a circuit of injectors SL-43, SL-41 and/or SL-42.
- Individual injectors can be easily removed for inspection or replacement.
- Carbon steel injectors with flouroelastomer packings.

Specifications:

Series	Output		Operating Pressure			
	Min.	Max.	Min.	Max.	Typical	Vent
SL-44	.008 cu. in. .131 cc	.080 cu. in. 1.31 cc	750 psig 52 bar	1000 psig 69 bar	850 psig 59 bar	150 psig 10 bar

Model	Number of Outlets	Connections		Dimensions			
Carbon Steel		Manifold Inlet	Injector Outlet	A in.	A mm	B in.	B mm
83749-1	1	⅜" NPTF (F)	⅛" NPTF (F)	Single Hole Mounting		2½	63
83749-2	2					3	76
83749-3	3			1¼	32	4¼	108
83749-4	4			2½	63	5½	140
83749-5	5			3¾	95	6¾	171
83748	1	—	—	Replacement for Manifold Injectors			

Notes:
1. Injector manifolds have 13/32" mounting holes for 3/8" bolt.
2. Injectors have flouroelastomer packings. Check packing compatibility with synthetic lubricants.
3. Injectors rated at 350°F (176°C) maximum ambient temperature, depending on lubricant used.
4. Output with adjustment screw hand-tightened is .009 cu. in. Maximum output is achieved with eight turns at .009 cu. in./turn.

Series SL-32, 33 and 42 Metric

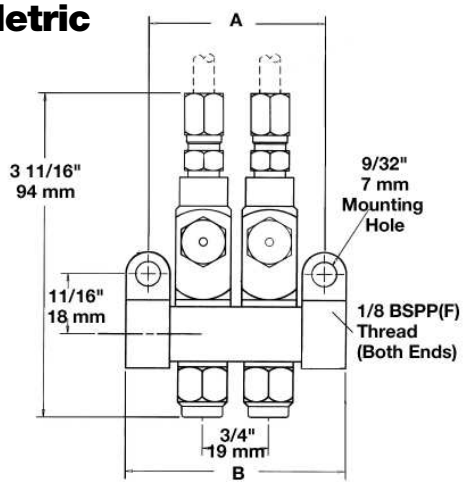

SL-32 Series

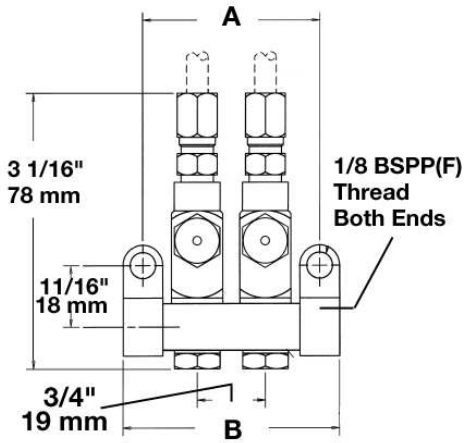

SL-33, 42 Series

With the same proven design as our U.S. standard injectors, the new metric versions of our popular small grease and oil injectors feature metric ports. Any surface that needs a wrench is metric. It's more convenient for customers in most of the world, and easier to maintain because there's no need for a second set of wrenches or adapters.

- Offered for international customers.
- Metric ports connect with metric lines without adapters.
- No need for a second set of tools.
- Proven design used in the United States.
- Models for both grease and oil.

Specifications:

Model			Outlets	Connections		Dimensions			
Oil SL-42	Grease SL-33	Grease SL-32		Inlet	Outlet	A in.	A mm	B in.	B mm
85352-1	85351-1		1	⅛ BSPP(F)	6 mm O.D. Tube Connection	1⅛	29	1⅝	41
85352-2	85351-2		2			1⅞	48	2⅜	60
85352-3	85351-3		3			2⅝	67	3⅛	79
85352-4	85351-4		4			3⅜	86	3⅞	98
85352-5	85351-5		5			4⅛	105	4⅝	118
85352-6	85351-6		6			4⅞	124	5⅜	137
		85353-1	1			1¼	32	1¾	44
		85353-2	2			2	51	2½	64
		85353-3	3			2¾	70	3¼	83
		85353-4	4			3½	89	4	102

Injector Connector Tube

Permits application of combined discharge of two or more Series SL-V, SL-1, SL-41 or SL-44 injectors through one feed line. Used where bearing size is such that multiple injector output is required. Fittings ⅛" NPT male each end. Carbon steel construction.

Model	For Injector Series	Connections
81646	SL-V, SL-V XL OR SL1, SL41, SL44	⅛" NPTF Male
274824	SL-1 to SL-V connection	⅛" NPTF Male

Injector Outlet Adapter

Converts individual injector lubricant outlet when standard ⅛" O.D. tube is not desired. All adapters are carbon steel unless otherwise noted.

Model	For Injector Series	Outlet Connections
14988	SL32, SL33, SL42, SL43	⅛" NPTF Female
84200		¼" O.D. Tube
14991		⅛" NPTF Male
249281		4 mm Tube
249282		6 mm Tube

Manual Grease Fitting Adapter

Allows manual lubrication of the machine between normal system cycles. Carbon steel with Nitrile seals.

Model	For Injector Series	Outlet Connections
84195	SL32, SL33, SL42, SL43	⅛" O.D. Tube
84203		¼" O.D. Tube

Injector Locking Cap

Carbon steel locking caps set injectors to fixed output.

Model	For Injector Series	Fixed Volume Output
102781	SL32, SL43	.002 in³ / .033 cc
	SL33, SL42	.003 in³ / .049 cc

Injector Cover Caps

Injector cover caps are designed to protect the injector from dirt, harmful liquids and fumes.

Model	Fits Injector Series	Covers	Material	Length		Diameter	
				in.	mm	in.	mm
273088	SL-V	Indicator Stem	Polycarbonate	1.5	38.1	.715 (ID)	18.2
273089	SL-V XL			2.2	55.9	.715 (ID)	18.2
83272	SL1, SL44		Vinyl	1.5	38.1	.69 (ID)	17.5
83730	SL11			2.0	50.8	1.125 (ID)	28.6
68483	SL32, SL33, SL42, SL43	Measuring Chamber		1.25	31.2	.5 (ID)	12.7
90537	SL1, SL41, SL44	Injector Body	Aluminum	3.25	82.6	1.19 (ID)	30.2

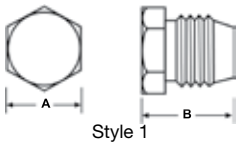

Style 1

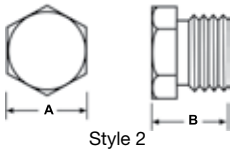

Style 2

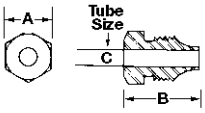

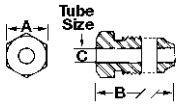

Model 68874

Closure Plugs for Injectors and Manifolds

For use in plugging lubricant outlets of injectors and manifolds.

Model	Material	Thread Size (in)	A in./mm	B in./mm	Style
* 12698	Carbon Steel	5/16-24	5/16 / 7.9	1/2/ 12.7	1
* 12698-9	Stainless Steel				2
12511	Carbon Steel	1/8 PTF	7/16 / 11.1	7/16 / 11.1	
12511-9	Stainless Steel				
67044		3/8 NPT		13/16 / 20.6	
67007		1/4 NPT	3/16 / 4.8	5/8 / 15.9	
67007-9					

* For plugging outlet of series SL-32, SL-33, SL-42, SL-43 injectors.

Compression Nuts

Model	Style	Material	Thread Size (in)	A in./mm	B in./mm	C in./mm
66260	One Piece	Brass	5/16-24	5/16 / 7.9	1/2 / 12.7	1/8 / 3.2
66260-9		Stainless Steel				
83924	Two Piece	Brass				
83924-9		Stainless Steel				
66713	One Piece	Brass	7/16-24	7/16 / 11.1	5/8 / 15.9	1/4 / 6.3

Injector-Operated Air Valve

Model	For Injector Series	Air Inlet	Air Outlet
82272	SL-1, SL-44	1/8" NPTF(F)	1/8" NPTF(F)

Air Lubricant Spray Devices

Model	Use With Series	Air Inlet (in)	Lubricant Inlet (in)	Spray Outlet	Air Consumption
68421	SL1, SL44	1/4 NPTF Female	1/4 NPTF Female	Fixed Nozzle	3.5 CFM @40 PSI 99 l/min @2.8 bar
69456				Swivel Nozzle	4.1 CFM @60 PSI 116 l/min @4.1 bar
* 68587				Bulkhead Mount	5.2 CFM @80 PSI 147 l/min @5.5 bar
84204	SL32, SL33, SL42, SL43	1/8 NPTF Female	7/16 – 24 Male	Fixed Nozzle	Throttle Controlled

* 3/16" (4.8 mm) maximum bulkhead thickness.

Metric Outlet Adapters

Adapts injector outlet to 4 or 6 mm tubing.

Conversion Kit Model No.	Tubing Size	Material	Nut	Ferrule
249281	4 mm	Carbon Steel	249277	249271
249282	6 mm	Carbon Steel	249274	249273

Assembly comes with one nut and one ferrule.

Feedline Brush

Use to apply lubricant to chains and conveyors. 1/8" NPT(F) inlet, 1" long, 5/8" surface area diameter; aluminum body with nylon bristles.

Continuous Innovation Increases Pump Life and Simplifies Pump Installation, Operation and Service

FlowMaster II Features

- Increases pump life and simplifies pump installation, operation and service
- Common crankcase design for all FlowMaster motors (hydraulic, AC or DC electric)
- Less susceptible to grease contamination
- Pump and reservoir combination models are level sensor and shut-off system ready
- Culmination of years of design and performance improvements makes this a premium-choice pump for single-line parallel lubrication systems
- Two year warranty

FlowMaster II crankcase

FlowMaster II Improvements

Crankcase Improvements

- 4-bolt hole pattern for all FlowMaster motors
- Dual bearing load support
- O-ring seals for all motors
- Wider bolt-hole pattern for easier top mounting of pump
- All FlowMaster II pumps will fit existing reservoirs
- Dual support ribs for increased strength
- Inner crankcase seal allows for easy and clean motor replacements without loss of crankcase oil
- Increased depth of pump tube and crankcase interface for added strength
- Integrated crankcase oil drain for easier oil change

Follower

Follower Improvements

- 2" (51 mm) closed foam seal resists grease by-pass
- Larger side bearing surface virtually eliminates tilting of the follower plate
- Improved vent tube seal
- Sturdy construction greatly enhances sealing properties
- Grease level-sensor ready

Reservoir

Reservoir Improvements

- Reservoir design incorporates 1" (25.4 mm) fill and 1¼" (32 mm) overflow ports
- Accommodates new 2" (51 mm) follower
- Lids are adjusted for top-mounting FlowMaster II pumps
- Lids can be easily converted to grease level system operation
- Each reservoir includes two lifting eye bolts for safety
- Rigid pressure outlet connection fittings are replaced by a single flexible hose

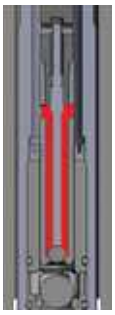

New ball check

Upper Ball Check Design

- Ball check spring has been removed from flow path allowing 70% more annular flow area
- Reduces clogging problems caused by contamination from unfiltered grease
- Grease has a clear flow path, reducing downtime and costly repairs

Electric FlowMaster II Pump

- 19:1 gear ratio results in lower current draw
- Gear sets can be changed for different ratios
- 18" (457 mm) wire motor leads with Deutsch connectors for easier installation
- Wire leads are sheathed for protection from the elements and rub areas

Hydraulic FlowMaster II Pump

- Four-bolt motor design with dual bearing drive shaft support virtually eliminates motor loosening
- O-ring motor-to-crankcase seal virtually eliminates oil leaks
- Same hydraulic manifold and controls as on FlowMaster I models

Model Numbers and Specifications

Discontinued model (reference only)	FlowMaster II model	Power and gear ratio	Size		Description
			lb.	kg.	
85471	85728	24 V DC electric, 19:1	60	27	Reservoir and pump
85487	85723	Hydraulic	60	27	Reservoir and pump
86258	85722	Hydraulic	60	27	Reservoir and pump
85677	85726	Hydraulic	90	41	Reservoir and pump
85220	85727	Hydraulic	120	54	Reservoir and pump
85518	85724[1) 2)]	Hydraulic	60	27	Reservoir and pump
85585	85725	Hydraulic	90	41	Reservoir and pump
85473	85730	24 V DC electric, 19:1	120	54	Reservoir and pump
85472	85729	24 V DC electric, 19:1	90	41	Reservoir and pump
85482	85734	Hydraulic	400	181	Pump
85481	85732	Hydraulic	60	27	Pump
85480	85733	Hydraulic	120/90	54/41	Pump
85587	85736	24 V DC electric, 19:1	35	16	Pump
85554	85737	24 V DC electric, 19:1	60	27	Pump
85591	85739	24 V DC electric, 19:1	400	181	Pump
85483	85731	Hydraulic	35	16	Pump
85566	85738	24 V DC electric, 19:1	120/90	54/41	Pump
85484	85735	Hydraulic	60	27	Pump
85676	85742[1)]	Hydraulic	120/90	54/41	Pump
85678	85741[1)]	Hydraulic	60	27	Pump
85599	85743	115 to 230 V AC electric, 1 ph, 19:1	120/90	54/41	Pump
85598	85744	115 to 230 V AC electric, 1 ph, 19:1	400	181	Pump
85850	85745	220 to 420 V AC, 50 Hz, 3 ph, 19:1 230 to 460 V AC, 60 Hz, 3 ph, 19:1	120/90	54/41	Pump
85851	85746	220 to 420 V AC, 50 Hz, 3 ph, 191 230 to 460 V AC, 60 Hz, 3 ph, 19:1	400	181	Pump
85569	85747	24 V DC electric, 17.8:1	35	16	Pump
85552	85748	24 V DC electric, 34:1	35	16	Pump
85553	85749	24 V DC electric, 34:1	120/90	54/41	Pump.
274873	85750	24 V DC electric, 7:1	35	16	Pump
274874	85751	24 V DC electric, 7:1	35	16	Pump
276041	85752	12 V DC electric, 19:1	35	16	Pump
276360	85753	12 V DC electric, 19:1	35	16	Pump
85592	85754	12 V DC electric, 19:1	60	27	Pump
277560	85740	24 V DC electric, 19:1	55	25	Pump

[1] Fixed hydraulic control valves. Call Technical Service for information.

[2] Developed for the fracking industry. Call Technical Serive for details.

Lincoln's New Design Automatically Shuts Off Grease Fill Supply To The Reservoir

Lincoln's advanced grease level gauge design with automatic overflow shut-off option is unlike any other system in the industry.

- The system senses the position of the follower in the reservoir (i.e., grease level) and sends the signal to a level gauge which can be mounted at the fill station.
- Grease level can be determined at all times.
- The level indicator signal can also be integrated into on-board systems.
- The system can prevent dangerous and costly overfills when used with the automatic shut-off valve system.
- The sensor and follower plate automatically signals a high pressure shut-off valve to the reservoir before overfilling occurs.
- Reduces maintenance time allowing personnel to do other jobs.

Unlike other shut-off systems, the Lincoln system does not use pressurized technology. Therefore, the reservoir is not completely welded together and, thus, the system does not need to adhere to the governmental pressurized-vessel regulations in some countries (Australia).

Overflow spillage is a common result of ground filling large grease reservoirs located in remote or hard-to-reach areas of machines. The Lincoln automatic shut-off system prevents this type of overflow avoiding safety hazards which can result in injury and potential costly fines. As a result, it is easy to see how this system will pay for itself. This system is completely retrofitable to all FlowMaster pump and bucket combinations with a follower.

When filling the reservoir, a high-pressure shut-off valve activates when the reservoir is full, stalling the supply pump. After the supply pump is turned off, a pressure relief button on the control box opens to relieve supply line pressure so it can be safely uncoupled.

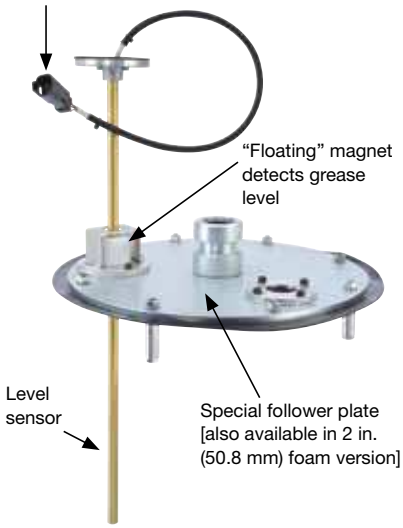

FlowMaster pump and reservoir with 2" (50.8 mm) foam follower and level sensor

Model 280450

Model 283005

Model 276849

Model 274872

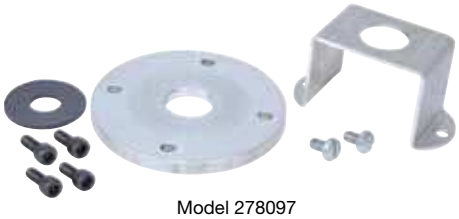

Model 278097

Model 280414

Model 280450

Control box with grease-level gauge (24 V DC), “full” alarm light and momentary switch for shut-off valve.

Model 283005

7,350 psi (507 bar) shut-off valve is designed to prevent overflow during reservoir filling.

Model 276849

Special FlowMaster reservoir lid to accept sensor .

Model 274872

10,000 psi (689.5 bar) high-pressure gauge before shut-off valve.

Model 278097

Follower magnet bracket kit.

Model 280414

Cable assembly between sensor and controller.

Model	Description
280455	Controller for level sensor only
280450	Controller for level sensor and overflow prevention system
283005	7 350 psi (507 bar) high-pressure shut-off valve
274524	Sensor for standard 60 lb. (27 kg) follower
277659	Sensor for 2 in. (50.8 mm) 60 lb. (27 kg) foam follower
274312	Standard 60/90 lb. (27/41 kg) follower with sensor bracket
85706	2 in. (50.8 mm) 60/90 lb. (27/41 kg) foam follower with sensor bracket
280441	Sensor-ready lid for 60/90 lb. (27/41 kg) reservoir with standard follower
277703	Sensor-ready lid for 60/90 lb. (27/41 kg) reservoir with 2 in. (50.8 mm) foam follower
278092	Sensor for standard 90/120 lb. (41/54 kg) follower
277654	Sensor for 2 in. (50.8 mm) 90/120 lb. (41/54 kg) foam follower
278094	Standard 120 lb. (54 kg) follower with sensor bracket
278095	2 in. (50.8 mm) 120 lb. (54 kg) foam follower with sensor bracket
280442	Sensor-ready lid for 120 lb. (54 kg) reservoir with standard follower
278096	Sensor-ready lid for 120 lb. (54 kg) reservoir with 2 in. (50.8 mm) foam follower
280414	30 ft. (10 m) controller cable
278097	Follower magnet bracket kit (for all followers)
85763	60 lb. (27 kg) 24 VDC FlowMaster II pump and bucket with sensor
85762	90 lb. (41 kg) 24 VDC FlowMaster II pump and bucket with sensor
274872	10,000 psi (689.5 bar) high-pressure gauge; ¼ in. NPT; 2½ in. (63.5 mm) face

Note: standard follower, sensor and lid must be used together. 2 in. (50.8 mm) foam follower, sensor and lid must be used together. Do not mix.

WARNING

Make sure fill coupling is capable of handling high pressure.

HTL Single Shot Hydraulic Lubricator Pump for Hammers

- Delivers precise lubrication every time the hammer cycles
- Increase productivity—no work interruption
- Reduces machine repairs and replacement costs

Arms and breakers move constantly and exert enough force to demolish a building or repair roads in a tough environment filled with grit and debris. Many OEMs recommend frequent lubrication of that hammer to achieve optimal performance and to hold down maintenance and repair costs. However, deadline-driven operators rarely halt work to grease the hammer, which can lead to breakdowns that grind down productivity and inflate repair expenses. Lincoln's HTL Pumps make precise, consistent lubrication a reality. Now your operator can lubricate the hammer without leaving the cab. The pumps attach directly to the hammer, and your operator, with the push of a pedal, automatically sends a single shot of hydraulic fluid to the pump. Then the pump gives one shot of grease to lubricate the bearing points. When the operator's foot comes off the pedal, pressure releases the spring in the pump so it's ready to lubricate again.

Applications: construction OEMs, hydraulic hammer retrofits, demolition attachments and medium to larger breakers/hammers

- Withstands vibrations of an operating hammer
- Travels with hammer, perfect for rental equipment or hammers used on various machines
- Hydraulic power supply
- Pedal-actuated
- Attached grease fitting allows for manual filling and fast priming of pump
- Uses standard 14.5-ounce grease cartridges and handles chisel paste
- To adjust output, metering plugs are available (0.006 in³ [0.1cm³] to 0.031 in³ [0.5cm³])
- Convenient visual low level indicator

Operating Temperature:	-10°F to +180°F / -23°C to +80°C
Hydraulic Port:	SAE #4 (7/16-20 UNF) O-ring
Pump Outlet:	SAE #4 (7/16-20 UNF) O-ring
Weight (Empty):	16.3 lbs. / 7.4 kg
Weight (Full):	17.3 lbs. / 7.8 kg

Specifications

Model No.	85429	85425	85424	85414
Hydraulic Ratio at Max. Output and Pressure*	2.4:1	0.7:1		
Max. Hydraulic Operating Pressure:	2600 psig (112 bar)	5000 psig (345 bar)		
Max. Recharge (or Vent) Pressure:	400 psig (28 bar)	1100 psig (75 bar)	600 psig (41 bar)	1100 psig (75 bar)
Max. Lube Outlet Pressure:	6500 psig (450 bar)			
Output per Stroke (Std. Metering Plug)	.018 cu. in. (0.3 cc) Std. .006 - .031 cu. in. (0.1 - .5 cc) Optional*			.031 cu. in. (0.5 cc) Std. .006 - .031 cu. in. (0.1 - .5 cc) Optional*
Grease Reservoir Volume:	14.5 oz.			

*Optional metering plugs are available for different output volume. See Pump Output Adjustment chart below.

Pump Output Adjustment Metering Plug

Model No.	Output per Stroke
271924	0.006 in³ / 0.1 cm³
271925	0.012 in³ / 0.2 cm³
271926 *	0.018 in³ / 0.3 cm³
271927	0.031 in³ / 0.5 cm³

***Note:** Standard plug included with pump

HTL 201US Continuous Hydraulic Lubricator Pump for Hammers

- Delivers precise lubrication every time the hammer operates
- Increase productivity—no work interruption
- Reduces machine repairs and replacement costs

Arms and breakers move constantly and exert enough force to demolish a building or repair roads in a tough environment filled with grit and debris. Many OEMs recommend constant lubrication of that hammer to achieve optimal performance and to hold down maintenance and repair costs. However, deadline-driven operators rarely halt work to grease the hammer, which can lead to breakdowns that grind down productivity and inflate repair expenses. Lincoln's HTL Pumps make precise, consistent lubrication a reality. Now your operator can lubricate the hammer without leaving the cab. The pumps attach directly to the hammer, and your operator, with the push of a pedal, automatically sends a continuous flow of hydraulic fluid to the pump. Then the pump gives continuous grease to lubricate the bearing points. When the operator's foot comes off the pedal, pressure releases the flow in the pump so it's ready to lubricate again.

Applications: construction OEMs, hydraulic hammer retrofits, demolition attachments and medium to larger breakers/hammers

- Mounts directly on the hydraulic device and lubricates continuously while in operation
- Continuous lubrication with small quantities during the working cycle
- Compact design
- Independent – the pump stays with the tool that requires lubrication even if the carrier unit is exchanged.
- 14.5 oz. cartridge can be replaced or the reservoir bulk filled with the special built-in adapter making it ideal for OEMs or rental fleets that specify a specific grease or chisel paste on their equipment.
- Low lubricant level indicator lets operator know when to fill or change cartridges.

Operating Temperature:	-13°F to +140°F / -25°C to +60°C
Hydraulic Port:	G ¼ BSPP O-ring
Pump Outlet:	G ¼ BSPP O-ring

Specifications

Model No.	**85446**
Max. Hydraulic Operating Pressure:	1160 to 3045 psi (80 to 210 bar)
Max. Lube Outlet Pressure:	1740 to 3916 psi (120 to 270 bar)
Output per Stroke	0.13 in^3 / stroke (0.22 cm^3 / stroke) to 0.41 in^3 / stroke (6.7 cm^3 / stroke)
Grease Reservoir Volume:	14.5 oz.

Taking Lincoln's Pump Performance and Dependability In A Totally New Direction

The fully integrated P653S pump is an example of Lincoln's commitment to providing innovative, cost-effective solutions through industry-leading advances in technology. This next-generation, lower-cost pump package can be fitted with one of four reservoir sizes and easily adapts to many applications.

P653S Pump Features

- Integrated pump supplies lubricant to a single line parallel lubrication system
- Pumps low- and high-viscosity greases including industry standard NLGI grade 2 grease
- Easily interfaces with telematics technology in today's heavy equipment
- Operating temperature range from -40°F to +158°F (-40°C to +70°C) VDC or 32°F to 122°F (0°C to 50°C) VAC*
- Neutral switch allows mobile equipment to remain idling with pump power on but the timer is deactivated – allowing manual lubrication functionality.
- All pumps include low-level and system fault alarms

Benefits

- Integration of major system components reduces labor and overall costs
- Simplifies lubrication system design
- Installation time is reduced due to the "plug-and-play" pump design. Simply mount the pump, connect power and the supply lines and the system is ready for operation.
- Neutral switch ensures lubrication only when the machine is operating – eliminating wasted grease.

* Appropriate greases apply

15 AND 20 LITER RESERVOIR KITS

Convert any 4 or 8 liter P653S or P603S pump without a follower to a 15 or 20 liter reservoir with the following kits:

Reservoir size:	Part No.
15L	276764
20L	276765

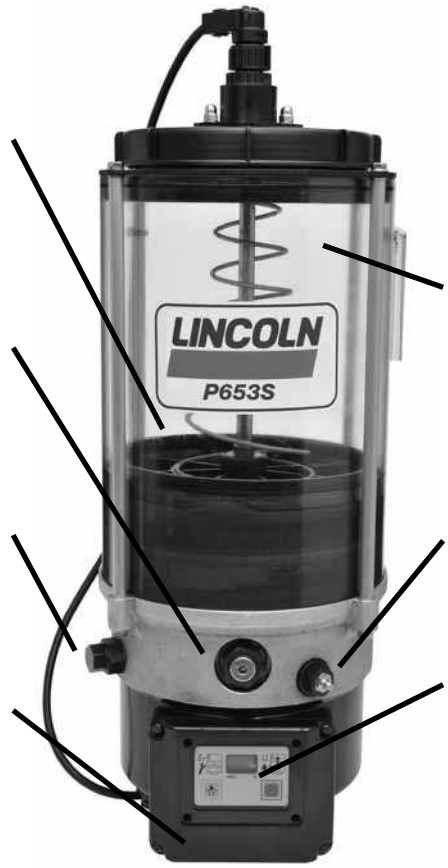

Available With or Without Follower (shown with follower)

High-Volume Output

Vent Valve

120/220 AC or 24-DC Pump

INTERNAL COMPONENTS

- **Telematics Signaling Capabilities for Low Level and System Fault Detection**
- **Pressure Switch or Transducer**

Reservoir Available in Four Sizes – 4, 8, 15 and 20 Liters Means Versatility in Scheduling Refilling Service Intervals

Reservoir Refill Port

Programmable Controller

P653S Pump Specifications for Grease Applications

Electrical data	DC Pumps	AC Pumps
Incoming voltage:	19 to 31 VDC	100 to 240 VAC
Maximum current:	10 amps	1.7 amps
Frequency:	—	47 to 63 hz
Operating temperature:	-40 to +158°F (-40 to +70°C)	32 to 122°F (0 to 50°C)

Common Electrical Data for DC and AC Pumps

Minimum pause time:	4 min.
Maximum pause time:	59 hrs. 59 min.
Pause time increments:	1 hr. or 1 min.
Maximum pumping time:	12 min.

Pump P653S

Operating pressure with:	
Pressure switch (fixed):	3,500 psig (240 bar)
Pressure transducer (adj.):	1,400 to 4,600 psig (96 to 317 bar)
End of line pressure switch and transducer setting (not adj.):	2,500 psig (172 bar)
Number of outlets:	1
Output:	1.5 in^3/min (24.6 cm^3/min)

Pump Elements

Piston diameter:	7 mm
Number of pumping elements (connected together):	3
Protection	1P 6K9K

Available Pump Models

NOTE: All models are designed for grease and include stirring paddle and low-level detection. Pumps include remote signaling cable, relief valve, electrical connectors and external pressure switch or transducer (as indicated for each model).

Model No.	24 VDC	120/230 VAC 50/60 Hz	Reservoir Size (L)	Follower Plate	Internal Pressure Switch	Internal Pressure Transducer	Internal & End-of-Line Pressure Switch	Internal & End-of-Line Pressure Transducer
80086	X		4		X			
80087	X		4			X		
80105	X		4				X	
80106	X		4					X
80076	X		4	X	X			
80077	X		4	X		X		
80109	X		4	X			X	
80110	X		4	X				X
80090	X		8		X			
80091	X		8			X		
80107	X		8				X	
80108	X		8					X
80080	X		8	X	X			
80081	X		8	X		X		
80111	X		8	X			X	
80112	X		8	X				X
80120	X		20			X		
80121	X		15	X		X		
80122	X		15			X		
80129*	X		8		X			
80130*	X		4		X			
80131*	X		8		X			
80082		X	4		X			
80083		X	4			X		
80084		X	4				X	
80085		X	4					X
80072		X	4	X	X			
80073		X	4	X		X		
80074		X	4	X			X	
80075		X	4	X				X
80088		X	8		X			
80089		X	8			X		
80078		X	8	X	X			
80079		X	8	X		X		
80134		X	15			X		
80135		X	20	X				X

* PLC pause time controlled

P653S Pumps for Oil Applications

Two new pumps made especially for oil applications. These pumps operate the same as the grease version with low-level detect, internal pressure transducer and filtered filling through the lid. Available in two reservoir sizes.

Model	120/230 AC	Reservoir Size	Internal Transducer
80127	X	4 liter	X
80128	X	8 liter	X

P603S Pump Features

Reliable Operation in Harsh Environments

- Wind turbines – especially offshore
- Construction and mining
- Commercial vehicles
- Compact and medium-sized machines and industrial applications
- Robust and easy system layout
- Simple maintenance – easy to expand
- SE1 suction elements for used lubricant
- Increased profits and productivity
- Improved operating times; less costly downtime resulting from improper lubrication
- Lower costs for repairs and spare parts

Incoming metering	0.05 - 0.4 cm^3/stroke
Pump Output	12 cm^3
Supply voltage	12 VDC, 24 VDC, 100-240 VAC
Programmable controller	Yes
Reservoir capacity/liter	4, 8, 10, 15, 20
Integrated pressure sensor and vent	Yes
Visual low-level	Yes

Available Pump Models

Model No.	Description	Power	Size	Follower	Internal Transducer
645-41064-3	P603S- 4XLF -3Z7-AC-2A7.16-S13-SE	AC	4L	X	X
645-41062-3	P603S- 8XLF -3Z7-AC-2A7.16-S13-SE	AC	8L	X	X
645-41110-2	P603S- 8XLBO-3Z7-AC-3A7.16-S12-SE	AC	8L		X
645-41062-4	P603S- 8XLBO-3Z7-AC-3A7.16-S19-SE	AC	8L		X
645-41073-5	P603S-15XLF -3Z7-AC-2A7.16-S13-SE	AC	15L	X	X
645-41064-8	P603S- 4XLF1-3Z7-12-1A7.16-S01-SE	12 DC	4L	X (Bayonett)	X
645-41064-7	P603S- 4XNBO-3Z7-12-2A7.16-S01-SE	12 DC	4L		X
645-41110-3	P603S- 8XLF1-3Z7-12-1A7.16-S01-SE	12 DC	8L	X (Bayonett)	X
645-41062-9	P603S- 8XLF -3Z7-24-1A7.16-S01-SE	24 DC	8L	X	X
645-41064-4	P603S- 4XLBO-3Z7-24-1A7.16-S17-SE	24 DC	4L		X
645-41064-6	P603S- 4XLF -3Z7-24-1A7.16-S13-SE	24 DC	4L	X	X
645-41064-2	P603S- 4XNBO-3Z7-24-1A7.16-S01-SE	24 DC	4L		X
645-41062-8	P603S- 8XLBO-3Z7-24-2A7.16-S19-SE	24 DC	8L		X
645-41062-9	P603S- 8XLF -3Z7-24-1A7.16-S01-SE	24 DC	8L	X	X
645-41062-7	P603S- 8XLF -3Z7-24-1A7.16-S03-SE	24 DC	8L	X	X
645-41119-1	P603S-10XLF -3Z7-24-1A7.16-S13-SE	24 DC	10L	X	X
645-41175-5	P603S-4XNBO -3Z7-12-1A7.16-S22-SE	12 DC	4L		X
645-41119-2	P603S-10XLF -3Z7-AC-2A1.01-S13-SE	AC	10L	X	X

Pump and Accessories – All-In-One
The pump with integrated controller is easy to install. The all-in-one design of the pump includes the programmable controller, a pressure switch/transducer and a vent valve.

Simple System Design – Easy to Expand

The single-line system's design and layout is uncomplicated, making it easy to install and operate. A single mainline reduces material and installation costs.

Easy to Service

It is quick and easy to exchange out an injector. The mainline or neighboring injectors do not have to be removed. The exchange can be performed between lubrication cycles so that there is no wasted lubricant or excessive costly downtime.

Additional Pressure Switch

An additional pressure switch at the end of larger systems can be used for added pressure control to ensure correct lubrication.

Special Features for Wind Turbine Applications – Also for Off-Shore Systems

Lincoln single-line systems completely vent during the pause interval. As a result, they are suitable for fast separating lubricants.

For rotating operation in wind turbines, the reservoir is equipped with a follower plate and stirring paddle – which also facilitates the usage of fast separating lubricants. For stationary operation a stirring and fixed paddle is sufficient.

Pump Specifications

	P603S 12/24 VDC	P603S / AC
Pump Output	0.73 cu.in/min (12cm³/min)	0.73 cu.in/min (12cm³/min)
Maximum Working Pressure	4,350 psig (300 bar) / 3,480 psig (240bar)	4,350 psig (300 bar) / 3,480 psig (240bar)
Maximum Current Draw	2 Amps	2 Amps
Steering Paddle And Follower	Yes	Yes
Reservoir Size, Liter	4, 8, 10, 15 and 20	4, 8, 10, 15 and 20
Number Of Pumping Elements	3, (7 mm diameter)	3, (7 mm diameter)
RPM, Paddle (76˚F)	18	18
Pressure Switch At Pump	Yes	Yes
Transducer At Pump	Yes	Yes
Pressure Switch/ End Of Line	Yes	Yes
Transducer/ End Of Line	Yes	Yes
PCB	Yes	Yes
Separate Alarms, LL/Proxy Switch	No	No
24.0 VDC Input	Yes	Yes
Switching Power Supply	No	Yes
Connectors	Bayonet Style	Bayonet Style + Square Type (AC)
Data Logger	No	No
Remotely Change Lube Frequency	Yes	Yes
Count Control	Yes	Yes
Ignition & Neutral Switch	Yes	Yes
Acknowledging Fault	At Pump/External	At Pump/External
Manually Lub Switch, External	Yes	Yes
Pump On LED, External	Yes	Yes
Protection	IP 6K9K	IP 6K9K
Temperature	-40°C / +70°C	-40°C / +70°C

Once you have determined your total lubricant requirements, your greatest line length and compensated for line expansion, you're ready to determine the pump you need.

If your overall requirements are less than 2.4 cu. in. for oil or 2.15 cu. in. for grease, you can select a single stroke pump. Should your requirements demand more capacity, a reciprocating pump will fill the need.

Your Lincoln representative will suggest the best pump for you based on your application. Look over the following pages of pump selection options and feel free to ask questions.

Model 83817 Economy Grease Pump

Manual pump has metal reservoir and spring-loaded follower. Indicator pin in pump base shows when 2500 psi system operating pressure has been achieved.

Model:		**83817**
Output/Stroke:		.100 cu. in. / 1.6 cc
Reservoir Capacity:		1 lb. 30 cu. in. / .45 kg 492 cc
Lube Outlet:		⅛" NPTF (F)
Typical System Operating Pressure:	**Min.**	1200 psig / 82 bar
	Max.	3500 psig / 241 bar
Dimensions (HxWxL):	**in.**	15¼" x 5" x 5⅝"
	mm	387 x 127 x 141 mm
Filling Method:		14.6 oz. Grease Cartridge/Bulk Fill

Model 1810 Grease Pump

Translucent reservoir with spring-loaded follower. Indicator pin in pump base shows when 2500 psi system operating pressure has been achieved. Refill through included fitting using Model 81834 filler pump or other manual pump equipped with Model 645006 coupler.

Model:		**1810**
Output/Stroke:		.160 cu. in. / 2.6 cc
Reservoir Capacity:		5 lb. 150 cu. in./ 2.27 kg 2458.50 cc
Lube Outlet:		¼" NPTF (F)
Typical System Operating Pressure:	**Min.**	1200 psig / 82 bar
	Max.	3500 psig / 241 bar
Dimensions (HxWxL):	**in.**	16¼" x 7⅛ "x 7¾"
	mm	413 x 181 x 197 mm
Filling Method:		81834 Filler Pump

Centro-Matic® Integrated Pumps

All models are air-operated, positive displacement pumps delivering a maximum volume by means of a single stroke of the pump (volumes listed below). Solenoid air valves and adjustable solid-state time controls are integrated into the pump body. All pumps are designed to deliver grease to single-line injectors and include a special high-volume refill fitting. Acrylic reservoirs are available in several sizes. Integrated controls feature LED indicators for “Power On”, “Pump On” and “Alarm,” along with a membrane-type, “Manual Lube” switch.

Model 85434

Model 85434 Integrated Grease Pump

Ratio:		31:1
Power:		120 VAC
Typical System Operating Pressure:	**Min.**	1200 psig / 82 bar
	Max.	3500 psig / 240 bar
Maximum Output:		1.4 in³ / 18.7 cm³
Reservoir Capacity:		4.5 lbs. / 1.8 kg
Dimensions (LxWxH):		24.70" x 6.52" x 18.11" / 627 x 166 x 460 mm

Model 85435 Integrated Grease Pump

Same as Model 85434 except 240 VAC.

Model 85442

Model 85436 Integrated Grease Pump

Same as Model 85434 except with a Ratio of 25:1 and Maximum Output of 2.15 in³ (35.2 cm³).

Model 85442 Integrated Grease Pump

Ratio:		20:1
Power:		120 VAC
Typical System Operating Pressure:	**Min.**	1200 psig / 82 bar
	Max.	3500 psig / 240 bar
Maximum Output:		0.45 in³ / 7.4 cm³
Reservoir Capacity:		1 lb. / 0.450 kg
Dimensions (LxWxH):		5.25" x 7.24" x 12.02" / 133 x 184 x 305 mm

Model 85444

Model 85444 Integrated Grease Pump

Ratio:		20:1
Power:		120 VAC
Typical System Operating Pressure:	**Min.**	1200 psig / 82 bar
	Max.	3500 psig / 240 bar
Maximum Output:		0.45 in³ / 7.4 cm³
Reservoir Capacity:		4 lbs. / 1.8 kg
Dimensions (LxWxH):		5.25" x 7.24" x 20.75" / 133 x 184 x 527 mm

Model 85445 Integrated Grease Pump

Same as Model 85444 except 240 VAC.

Timer and Controller Specifications

On Time	Off Time	Alarm Contacts	Operating Temperature
10 sec or 30 sec	1/2 to 30 min or 30 min to 30 hrs	8 amps @ 250 VAC	-10°F to 150°F -23°C to 65°C

Model 82886

Model 83668

Model 82653

Model 82886 Pump
Pump discharges lubricant on air-powered forward stroke and vents on springpowered return stroke through built-in check/vent valve. Reservoir is translucent with spring-loaded follower. Includes filler fitting for refilling reservoir with Model 81834 or other manual pump equipped with Model 645006 coupler.

Model 83668
Same as Model 82886 except includes larger reservoir.

Model 82653 Bare Pump
Pump uses air for forward and return stroke but dispenses lubricant on forward stroke only. Return stroke vents lubricant pressure through included check/vent valve. Translucent reservoir has spring-loaded follower. Refill through included filler fitting using Model 81834 or other manual pump equipped with Model 645006 coupler.

Model 83834 High Volume Bare Pump
Same as Model 82653 except 25:1 ratio, 2.15 cu. in (35.2 cc) maximum output.

Model 82655 Pump with Controls
Same as Model 82653 except includes Model 84501 solid state timer and 350244 four way electric solenoid valve.

Model 83800 High Volume Pump with Controls
Same as Model 83834 except includes Model 84501 solid state timer and 350244 four way electric solenoid valve.

Model	Lubricant/ Air Ratio	Max. Output	Reservoir Capacity	Reservoir Temp. Range	Air Inlet	Lube Outlet	Lubricant Oper. Pressure		Dimensions HxWxL	Air Valve Required
							Min.	Max.		
82886	20:1	.45 in³ 7.4 cm³	1 lb/.45 kg 30 in³/492 cm³	0°F to 150°F -18°C to 65°C	¼" NPTF(F)	¼" NPTF(F)	1200 psig / 82 bar	3500 psig / 240 bar	10⅜" x 5¼" x 6" 263 x 133 x 152 mm	3-way
83668			4 lb/1.81 kg 120 in³ 1967 cm³						18½" x 5¼" x 6" 470 x 133 x 152 mm	
82653	31:1	1.4 in³ 22.9 cm³							18½" x 5¾" x 21" 470 x 146 x 533 mm	4-way
82655										
83834	25:1	2.15 in³ 35.2 cm³								
83800										

Note:
Air consumption @ 100 psi is .15 CFM per stroke.

Timer Specifications

Cycle Time		On Time		Power Requirements	Ambient Operating Temp. Range
Min	Max	Min	Max		
20 Sec.	24 Hr.	10 Sec.	1 Min. 24 Sec.	120 VAC, 60 hz 110 VAC, 50 hz	10°F to +150°F -23°C +65°C

Note:
Refer to System Controls section for detailed timer and solenoid operated air valve specifications.

Model 83167

Includes transparent reservoir, spring-loaded follower, vent valve assembly and filler fitting for refilling of reservoir with 81834 filler pump or other manual pump equipped with Model 645006 coupler.

Model:		**83167**
Lubricant/Air Ratio:		40:1
Output/Min @ 100 PSIG Air:		12 cu. in. 197 cc
Reservoir Capacity:		12 lb. / 5.44 kg / 360 cu. in. / 5900 cc
Air Inlet:		⅛" NPTF (F)
Lube Outlet:		¾" NPTF (F)
Typical System Operating Pressure:	**Min.**	1200 psig / 82 bar
	Max	3500 psig / 241 bar
Dimensions (HxWxL):		22½" x 9" x 16¼" / 572 x 229 x 413 mm
Filling Method:		81834 Filler Pump
Reservoir:		Translucent Acrylic

Notes: 1. Pump requires 3-way air valve. 2. Air consumption @ 100 psi is .15 CFM per cycle

Model 83599

Same as Model 83167 except includes base mounting kit and metal reservoir with indicator rod for visual check of grease level. Reservoir includes spring-loaded follower.

Model:		**83599**
Lubricant/Air Ratio:		40:1
Output/Min @ 100 PSIG Air:		12 cu. in. / 197 cc
Reservoir Capacity:		12 lb. / 5.44 kg 360 cu. in. / 5900 cc
Air Inlet:		¼" NPTF (F)
Lube Outlet:		¾" NPTF (F)
Typical System Operating Pressure:	**Min.**	1200 psig 82 bar
	Max.	3500 psig 241 bar
Dimensions (HxWxL):		24⅜" x 9" x 18 3/16" / 619 x 229 x 462 mm
Filling Method:		81834 Filler Pump
Reservoir:		Aluminum

Notes: 1. Pump requires 3-way air valve. 2. Air consumption @ 100 psi is .15 CFM per cycle

Model 1823

Includes 2½" air motor driven pump, vent valve assembly, pump elevator, connecting lubricant and air hoses, and control panel.

Model:		**1823**
Lubricant/Air Ratio:		50:1
Output/Min @ 100 PSIG Air:		30 cu. in. / 492 cc
Drum Size:		U.S. standard 120 lb. refinery drum
Air Inlet:		⅜" NPTF (F)
Lube Outlet:		¾" NPTF (F)
Typical System Operating Pressure:	**Min.**	1200 psig / 82 bar
	Max.	3500 psig / 241 bar
Components included:		Pump & Vent Assembly 282288 Controller 85209 Pump Elevator 83447
Controller Electrical Requirements:		120V, 60 Hz., 110 V, 50hz

Notes: 1. Air consumption @ 100 psi is .42 CFM per cycle.
2. Model 83371 follower plate is available as an optional accessory.

Model 282288

Same specifications as Model 1823 but does not include elevator or controller.

Model 1827 Heavy-Duty Unit

Consists of PowerMaster pump, vent valve assembly with air and lubricant connecting hoses, drum cover and control panel.

Model:		**1827**
Lubricant/Air Ratio:		75:1
Output/Min @ 100 PSIG Air:		161 cu. in. / 2638 cc
Drum Size:		U.S. standard 400 lb. refinery drum
Air Inlet:		⅜" NPTF (F)
Lube Outlet:		⅜" NPTF (F)
Typical System Operating Pressure:	**Min.**	1200 psig / 82 bar
	Max.	3500 psig / 241 bar
Components included:		Basic Pump 2004 Vent Valve 85215 Controller 85209 Drum Cover 81675

Model 1828

Same as Model 1827 except includes Model 2008 pump, 85218 vent valve and Model 84034 drum cover sized for U.S. standard 120 lb. refinery drum. Includes 85209 controller.

Model 1829

Same as Model 1827 except includes Model 2010 pump (50:1 ratio, 231 cu.in./min. (3785 cc) delivery at 100 psig air). Fits U.S. standard 400 lb. refinery drum. Includes 85209 controller and 85215 vent valve.

Model 1849

Fully automatic assembly including pump, 220/440 volt motor, translucent reservoir with spring-loaded follower, 4000 psi (276 bar) safety unloader, adjustable pressure switch and time control. Time control is adjustable for lubrication cycle frequency of 5, 10, 15, 20, 30 or 60 min. Solid state time delay relay (35 sec. to 240 sec.) included for connection of audible or visual alarm to signal lubrication failure due to empty reservoir or broken supply line.

Model:		**1849***
Output Min:		18 cu. in. / 295 cc
Reservoir Capacity:		12 lb. / 5.44 kg / 360 cu. in. / 5900 cc
Lube Outlet:		¼" NPTF (F)
Electrical Specifications:	**Pump Motor**	220/440 VAC, 60 Hz, 3 ph
	Controller	115 VAC, 60 Hz
Typical System Operating Pressure:	**Min.**	1200 psig / 82 bar
	Max.	3500 psig / 241 bar
Dimensions (HxWxL):		25⅜" x 13" x 19 13/16" / 645 x 330 x 503 mm
Reservoir Fill Method:		81834 Filler Pump or Manual Pump and 645006 Coupler

* See Model 85520 in Systems Control section for controller specifications.

Model 201849

Same as Model 1849 except has 7 lb. reservoir capacity.

Model 1835

Same as Model 1849 except has 115 VAC, 60 Hz motor and controller.

Model 1833

Similar to Model 1849 except: 24 VDC pump motor and controller; metal reservoir with visual level indicator rod; 2.5, 5, 10, 20, 40 and 80 minute cycle frequency adjustment; 60 second fixed on time and alarm relay features. Incorporates pressure switch factory set at 2500 psi (172 bar).

Model:		**1833**
Output/Min:		18 cu. in. / 295 cc
Reservoir Capacity:		12 lb. / 5.44 kg / 360 cu. in. / 5900 cc
Lube Outlet:		¼" NPTF (F)
Electrical Specifications:	**Pump Motor**	¼ HP, 24 VD, 10 AMP
	Controller	24 VDC, 5 watts
Typical System Operating Pressure:	**Min.**	1200 psig / 82 bar
	Max.	3500 psig / 241 bar
Dimensions (HxWxL):		34¼" x 11½"x 21¾" / 870 x 292 x 552 mm
Reservoir Fill Method:		81834 Filler Pump or Manual Pump with 645006 Coupler

Notes:
1. Controller has provision for remote manual lube button and remote lube failure alarm.
2. Enclosure is designed to meet NEMA 3S and 12 specifications.

Manually Operated Oil

Model 1812

Pump has translucent reservoir with filler cap and strainer. Pump base has built-in check/vent valve and an indicator pin to show when system pressure is achieved.

Model:		**1812**
Output/Stroke:		.160 cu. in. / 2.6 cc
Reservoir Capacity:		4½ pint / 130 cu. in. 2.13 liter / 2130 cc
Lube Outlet:		¼" NPTF (F)
Typical System Operating Pressure:	**Min.**	750 psig / 52 bar
	Max.	1000 psig / 69 bar
Dimensions (HxWxL):		16¾" x 7⅛"x 7¾" / 425 x 181 x 197 mm

Centro-Matic® Integrated Pumps

All models are air-operated, positive displacement pumps delivering a maximum volume by means of a single stroke of the pump (volumes listed below). Solenoid air valves and adjustable solid-state time controls are integrated into the pump body. All pumps are designed to deliver fluid lubricants to single-line injectors and are filled via a spring-loaded filler cap and internal filter. Acrylic reservoirs are available in several sizes. Pump Models 85432 and 85433 do not include a reservoir,and are designed for remote or bulk-fill oil applications (80 psi/5.4 bar maximum head pressure). Integrated controls feature LED indicators for “Power On”, “Pump On” and “Alarm,” along with a membrane-type, “Manual Lube” switch.

Model 85430

Model 85430 Integrated Fluid Pump

Ratio:		20:1
Power:		120 VAC
Typical System Operating Pressure:	**Min.**	750 psig / 52 bar
	Max.	1000 psig / 69 bar
Maximum Output:		2.4 in³ / 39.3 cm³
Reservoir Capacity:		4.5 pints / 2.1 liters
Dimensions (LxWxH):		24.70" x 6.52" x 18.11" / 627 x 166 x 460 mm

Model 85431 Integrated Fluid Pump

Same as Model 85430 except 240 VAC.

Model 85432

Model 85432 Integrated Fluid Pump

Same as Model 85430 except without reservoir.

Model 85433 Integrated Fluid Pump

Same as Model 85432 except 240 VAC.

Model 85438

Model 85438 Integrated Fluid Pump

Ratio:		20:1
Power:		120 VAC
Typical System Operating Pressure:	**Min.**	750 psig / 52 bar
	Max.	1000 psig / 69 bar
Maximum Output:		0.45 in³ / 7.4 cm³
Reservoir Capacity:		1.25 pints / 0.6 liters
Dimensions (LxWxH):		5.25" x 7.24" x 12.02" / 133 x 184 x 305 mm

Model 85440

Model 85440 Integrated Fluid Pump

Ratio:		20:1
Power:		120 VAC
Typical System Operating Pressure:	**Min.**	750 psig / 52 bar
	Max.	1000 psig / 69 bar
Maximum Output:		0.45 in³ / 7.4 cm³
Reservoir Capacity:		4.25 pints / 2.0 liters
Dimensions (LxWxH):		5.25" x 7.24" x 20.75" / 133 x 184 x 527 mm

Model 85441 Integrated Fluid Pump

Same as Model 85440 except 240 VAC.

Timer and Controller Specifications

On Time	Off Time	Alarm Contacts	Operating Temperature
10 sec or 30 sec	1/2 to 30 min or 30 min to 30 hrs	8 amps @ 250 VAC	-10°F to 150°F -23°C to 65°C

Model 82885

Model 83667

Model 82676

Model 82885

Pump discharges lubricant on air-powered forward stroke and vents on spring-powered return stroke through built-in check/vent valve. Translucent reservoir is refilled through filler cap with strainer.

Model 83667

Same as Model 82885 except includes larger reservoir.

Model 82570

High-volume pump discharges lubricant on air-powered forward stroke and vents through included check/vent valve on air-powered return stroke. Translucent reservoir is refilled through filler cap with strainer.

Model 82573

Air-operated, single stroke oil pump and timer assembly. Same as Model 82570 except includes Model 84501 solid state timer and 350244 four-way electrical solenoid valve. Power requirements: 120 VAC, 60 Hz; 110 VAC, 50 Hz.

Model 82676

Same as Model 82570 except for use with external oil supply through ½" NPT(F) oil inlet (maximum head pressure 80 psi (5.5 bar)).

Model	Metric Equiv.	Lubricant/ Air Ratio	Max. Output	Reservoir Capacity	Air Inlet	Lube Outlet	Lubricant Oper. Press.		Dimensions HxWxL	Air Valve Required
							Min.	Max		
82885	85391	20:1	.45 in³ 7.4 cm³	1¼ pint / .6 liter 36 in³ / 600cm³	¼" NPTF(F)	¼" NPTF(F)	750 psig 52 bar	1000 psig 69 bar	10⅜" x 5¼" x 6" 263 x 133 x 152 mm	3-way
83667				4½ pint / 2 liter 123 in³ / 2000 cm³					18½" x 5½" x 6" 470 x 140 x 152mm	
82570			2.4 in³ 39.3 cm³						17¾" x 5¾" x 18¼" 451 x 146 x 464 mm	4-way
82573									17¾" x 5¾" x 18¼" 451 x 146 x 464 mm	
82676				Remote					18½" x 5¾" x 21" 470 x 146 x 533 mm	

** Air consumption @ 100 psi is .15 CFM per stroke.
Check compatibility when using synthetic oils.

Timer Specifications for Model 82573 Only

Cycle Time		On Time	
Min.	Max	Min.	Max.
20 Sec.	1000 psig / 69 bar	750 psig / 52 bar	1 Min. 24 Sec.

Note:
Refer to System Controls section for detailed timer and solenoid-operated air valve specifications.

Model 283167

Includes 2½" air motor driven pump, vent valve assembly, translucent reservoir with filler cap and strainer and 1200 psi (82 bar) safety unloader.

Model:		**283167**
Lubricant/Air Ratio:		40:1
Output/Min. @ 100 PSI Air:		12 cu. in. / 197 cc
Reservoir Capacity:		15 pint / 7.1 liter, 433 cu. in. / 7100 cc
Air Inlet:		⅛" NPTF (F)
Lube Outlet:		¾" NPTF (F)
Typical System Operating Pressure:	**Min.**	750 psig / 52 bar
	Max.	1000 psig / 69 bar
Dimensions (HxWxL):		23¼" x 9" x 16¼" / 591 x 229 x 413 mm
Air Valve Required:		3-Way**

** Air consumption @ 100 psi is .15 CFM per stroke.

Note: Check compatibility when using synthetic oils.

Model 1826

Consists of Model 2002 PowerMaster pump, Model 85217 vent valve assembly, Model 81675 drum cover, Model 85209 controller, air and lubricant connecting hoses and 1200 psi (82 bar) safety unloader.

Model:		**1826**
Lubricant/Air Ratio:		24:1
Output @ 75 Cycles/Min:		462 cu. in. / 7571 cc
Drum Size:		U.S. standard 55-gal. refinery drum (removable head)
Air Inlet:		⅜" NPTF (F)
Lube Outlet:		¾" NPTF (F)
Typical System Operating Pressure:	**Min.**	750 psig / 52 bar
	Max.	1000 psig / 69 bar
Controller Electrical Requirements:		120 V 60 Hz, 110V 50 Hz

Notes:
1. See System Controls section for detailed controller specifications.
2. See Industrial Pumping catalog for basic pump specification, including air consumption.

Electric–Operated Oil Pump

Model 1848

Fully automatic assembly including pump, 220-/440-volt motor, translucent reservoir, 1200 psi (82 bar) safety unloader, adjustable pressure switch and time control. Time control is adjustable for lubrication cycle frequency of 5, 10, 15, 20, 30 or 60 minutes. Solid state time delay relay (35 sec. to 240 sec.) included for connection of audible or visual alarm to signal lubrication failure due to empty reservoir or broken supply line.

Model:		**1848**
Output/Min:		18 cu. in. / 295 cc
Reservoir Capacity:		14.7 pint / 6.96 liter, 424 cu. in. / 6960cc
Lube Outlet:		¼" NPTF (F)
Electrical Specifications:	**Pump Motor**	220/440 VAC, 60 Hz, 3 ph
	Controller Max	115 VAC, 60 Hz
Typical System Operating Pressure:	**Min.**	750 psig / 52 bar
	Max.	1000 psig / 69 bar
Dimensions (HxWxL):		25⅜" x 13" x 19 13/16" / 645 x 330 x 503 mm

Note: See Model 85520, System Controls section for controller specifications.

Lincoln offers 60, 90, 120, 240 or 400 lb. reservoirs for our bucket pumps. Here are the features:

- Rugged 14-gauge steel walls
- Large 1" NPT inlet for fast filling, 1¼" overflow outlet
- New 2” foam follower that virtually eliminates grease bypass
- New vent valve to bucket coupling
- Thick mounting ring that withstands severe vibration

These buckets work with hydraulic, air and electric pumps.

Eight bolts to resist lid loosening

Weld nuts for easy lid removal

1¼" overflow outlet

14-gauge steel wall reduces denting and follower plate hang-up

Fill tube to center of reservoir to prevent cocking of follower plate

Large 1"NPT fill inlet for faster filling

Thick mounting ring with twice as many mounting holes to resist loosening

Thick rubber seal to keep contaminants out

All buckets and followers come ready to accept the Lincoln grease level sensor or overflow protection system

Stop bolts on follower plate to prevent cocking

2" foam follower for better bypass protection

Model 84050

A 50:1 ratio double acting air-operated pump for high-volume displacement. Supplied with a 60-pound capacity metal reservoir with removable cover for easy filling. Includes air-operated vent valve and 5' (1.5m) air and lubricant connecting hoses.

Model:		**84050**
Lubricant/Air Ratio:		50:1
Output/Min @ 100 PSIG Air:		30 cu. in. / 492 cc
Reservoir Capacity:		60 lb. / 27 kg, 1800 cu. in. / 29,500 cc
Air Inlet:		⅜" NPTF (F)
Lube Outlet:		¾" NPTF (M) at Hose
Typical System Operating Pressure:	**Min.**	1200 psig / 83 bar
	Max.	3500 psig / 241 bar
Dimensions (HxWxL):		31¾" x 15⁷⁄₁₆" x 15⁹⁄₁₆" / 806 x 392 x 395 mm
Filling Method:		Bulk
Reservoir:		Steel

Notes: 1. Pump requires 3-way air valve.
2. Air consumption @ 100 psi is .42 CFM per cycle
3. Optional Model 92597 follower available.

Model 85460

Same as Model 84050 except includes installed visual low level and follower plate assembly.

High-performance FlowMaster hydraulic pumps combine rotary-driven pump motors with reciprocating pump tubes and flexible control features that perform in desert heat and arctic cold. Integrated control manifold adjusts the amount of lubricant and operating pressure. The pump's output is adjustable from 7 to 45 cubic inches per minute.

Supply Inlet Hydraulic Pressure, Max.:	3000 psig	200 bar
Operating Inlet Hydraulic Pressure:	300 to 420 psig	20 to 32 bar
Hydraulic Inlet Flow:	Up to 7 gpm	28 l/min
Pump Ratio with Manifold:	9:1 at low inlet pressure (300 to 350 psi/20 to 25 bar) and low inlet flow (below 2 gpm/7 lpm) pump ratio approaches 11:1 ratio at higher inlet pressure and flow	
Pump Output:	7 - 45 in³/min	
Operating Temperature:	-20° to +150°F	-10° to +65°C
Solenoid Valve Coil:	24 VDC	
Hydraulic Inlet Port:	SAE 4	
Tank Return Port:	SAE 6	
Pump Outlets:	¼" NPTF	
Max. Hydraulic Fluid Temp:	200°F	93°C

Pump Only Models

Model	Capacity			Solenoid Manual Override	Adjustable Flow Control	Adjustable Pressure Control
	Lbs.	gal	L			
85733	120	18	68	No	Yes	Yes
85732	60	8	30			
85734	400	55	208			
85731	35	5	19			
85676	90	10	38	Yes	Fixed	Fixed
85678	60	8	30			

For the complete system, when ordering 120 or 400 lb. refinery drum versions also order the following:

Capacity	Model No.	Description
120 lb.	84616	Drum Cover
	85492	Follower Assembly
	84990	Vent Valve Assembly
400 lb.	271606	Drum Cover
	270982	Follower Assembly
	271605	Vent Valve Assembly

Pump and Bucket Models with Follower Plate and Low-Level Detect

Model	Lbs.	Size gal	L	Solenoid Manual Override	Adjustable Flow Control	Adjustable Pressure Control
85727 *	120	18	68	No	Yes	Yes
85728 **	60	8	30			
85725	90	10	38			
85726 **		10	38	Yes	Fixed	Fixed
85722	60	8	30	No	Yes	Yes

*Includes high-level detect
**Does not include follower plate or low-level detect

Pump and Bucket Dimensions

Container Size	Pump - in. (mm)		Pump Bucket-in. (mm)	
	A	B	A	B
35 lb.	13.69 (348)	24.00 (609.7)	14.59 (371)	24.90 (632.7)
60 lb.	19.00 (483)	29.31 (744.7)	19.90 (505)	30.20 (766.7)
90 lb.	27.50 (699)	37.81 (954.7)	28.40 (721)	40.63 (1,031.7)
120 lb.	27.50 (699)	37.81 (954.7)	28.40 (721)	40.63 (1,031.7)
400 lb.	34.00 (864)	44.31 (1,125.7)	34.00 (864)	45.44 (1,154.7)

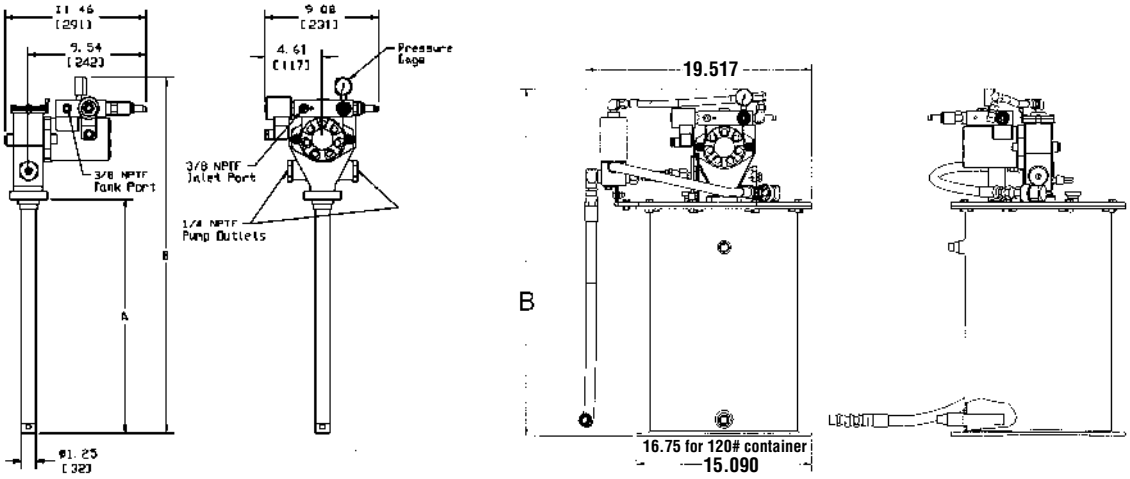

It seems too good to be true, but Lincoln's new Electric FlowMaster Pump can serve all but the largest automated lubrication applications. Now you can take advantage of the ease and economy of this efficient, versatile electric pump—no cost for air associated with running the pump and no hydraulic hoses to connect.

The Electric FlowMaster Pump is a workhorse. Because you can adjust the speed of the pump's motor, you can adjust the pump's output to precisely fit any application. Lincoln offers 12 different models.

For manual lubrication, use the pump with a hose reel and a dispensing valve.

24 and 12 VDC FlowMaster®

Operating Temperature Range:		-40° to +150°F	-40° to +65°C
Pump Outlets:		14" NPTF	
Motor:	**24 VDC**	1/2" HP Peak	
	12 VDC	1/3" HP Peak	

Pump Only Models

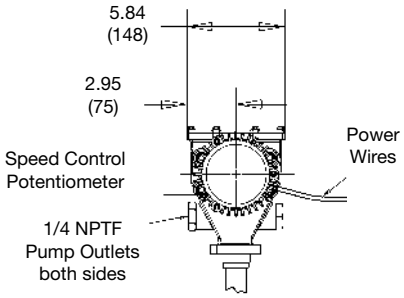

Model	Capacity			Power	Maximum Pressure Rating	Speed Range RPM
	lbs	gal	L			
85479	35	5	19	24 DC	2500 psi (172 bar)	9.5-100
85748	35	5	19		5000 psi (345 bar)	5-50
85749	120	18	68			
85737	60	8	30			9.5-100
85738	120	18	68			
85747	35	5	19		2500 psi (170 bar)	
85739	400	55	208		5000 psi (345 bar)	
85752	35	5	19	12 DC	2500 psi (172 bar)	
85753	35	5	19		2500 psi (172 bar)	
85754	60	8	30		3500 psi (241 bar)	

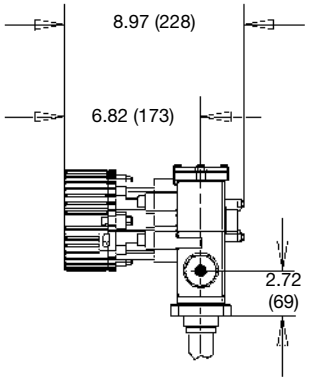

Model	Gear Ratio	Current Draw Amps	Output: in³/min	
			Min	Max
85479 *	17.8:1	2-5	0.7	6.3
85748	34:1	1-4.2	0.4	3.5
85749	34:1			
85737	19:1	1-6.5	0.7	6.3
85738	19:1			
85747	17.8:1	2-5		
85739	19:1	1-6.5		
85752	19:1	1-7.5		
85753	19:1			
85754	19:1			

* Kit consisting of pump, follower, bucket cover and hardware

Pump and Bucket Models

Model	Capacity			Power	Maximum Pressure Rating	Speed Range RPM
	lbs	gal	L			
85728	60	8	30	24 DC	5000 psi (345 bar)	9.5 - 100
85729	90	10	38			
85730 *	120	18	68			

Model	Gear Ratio	Current Draw Amps	Output: in³/min	
			Min	Max
85728	19:1	1 - 6.5	0.7	6.3
85729				
85730				

Above models include follower plate and low-level detect
* Includes high-level detect

Accessories

Description	120 lb.	400 lb.
Follower plate	85492	270982
Drum cover	85474	85475
Vent valve assembly: 24 VDC	85664	85665
Strainer	272180	272180

24 VDC Electric Vent Valve

Model No.	Description
274899	IP 67 Explosion Proof Rating
276325	IP 65 Rating
276903	IP 65 Rating
276919	Hardware Kit for 276903
525-32083-1	IP 54 Rating

For all FlowMaster II pumps replaced on original buckets, vent valve kit 278413 will be needed. This also applies to DC FlowMasters made after 2009.

120/230 VAC FlowMaster®

Now you can save the cost of air and plug in our new 120/230 VAC FlowMaster pump. Convenient and powerful, the 120/230 VAC FlowMaster pump allows you to tap into your AC power source and pump grease from a 120 lb. or 400 lb. drum. Rely on it to drive your automated lubrication systems such as Centro-Matic®, Mod Lube®, Quicklub® and Two-line.

Operating Temperature Range:	-40° to +150°F (-40° to +65°C)
Operating Voltage:	120/230 VAC (50/60 Hz single phase)
Pump Outlets:	¼" NPTF
Motor:	½" HP

Pump Only Models

Model	Capacity			Power	Maximum Pressure Rating	Speed RPM
	lbs	gal	L			
85744	400	55	208	120-230 AC	5000 psi (345 bar)	95
85743	120	18	68			

Model	Gear Ratio	Current Draw: Amps		Output: in³/min
		@120 V	@230 V	Max
85744	19:1	1-4.6	.5-2.4	6.3
85743				

Accessories

Description	120 lb.	400 lb.
Follower plate	85492	270982
Drum cover	85474	85475
Vent valve assembly: 120 VAC 230 VAC	85662 85660	85663 85661
Strainer	272180	272180

Reel-N-Flow Pump and Reel Kits

Operating Temperature	-20° to +140°F (-29° to +60°C)
Operating Voltage:	24 VDC (18 min., 30 max.)
Motor	⅓ HP (0.25 kw)
Max. Current Draw	15 AMPS
Max. Output	18.0 in³/min (295 (cm³/min)
Max. Output Pressure	6,000 psi (413.8 bar)
Pump Weight	35 lbs. kg (15.9)
Hose Reel Capacity	⅜" High Pressure Hose, 50 ft. (15 m)

Mounts on 35#/5-gallon refinery container

Pump Models

Model	Description
274873	24V, Bare, high-pressure pump
274874	24V, Bare pump with integrated pressure switch and manifold
276041	12V, Bare high-pressure pump
276360	12V, Bare pump with integrated pressure switch and manifold

Kit Models **Note: FlowMaster kit models will NOT be discontinued**

Model	Description	Bare Pump	Lid	Follower	Reel	Connecting Hose	Control Vlv. & Swivel
274886	85751 pump, lid and follower	85751	274878	274888			
274887	274886 with hose reel, 50' hose, control valve, swivel & 7' connecting hose	85751	274878	274888	94553H	276366	3050, 81729
276358	85753 pump, lid andfollower	85753	274878	274888			
276359	276358 with hose reel, 50' hose, control valve, swivel & 7' connecting hose	85753	275878	274888	94553H	276366	3050, 81729

Accessories

Model	Description
274872	10,000 psi Gauge
274934	35#/5-gal. Container Mount

220 - 460 VAC, 50 Hz / 60 Hz 3 Phase AC FlowMaster Pump

The high-performance FlowMaster product line is a new generation of pump technology. Compact and versatile, its unique rotary drive and modular gear set let you adjust the pump to exactly fit your application.

- Wires directly to existing AC service
- Reduces installation costs – no need to tap into hydraulic circuits or pipe in compressed air
- Integrates easily to many styles of lubrication systems

- Heavy industry
  - Mining
  - Steel
  - Paper
- General Industry
  - Food/beverage
  - Automotive
  - Packaging
  - And others

Pump Model:	**85745**	**85746**
Pump/Container Size:	120 lb.	400 lb.
Pump Output:	6.3 in³/min. (103 cm³/min.)	
Operating Temperature:	-40° to 150°F (-40° to 65°C)	
Motor Max. Temperature:	Up to 220°F (105°C)	
Operating Voltage:	3 Phase / 220 - 420 @ 50 Hz / 230 - 460 @ 60 Hz	
Motor Power:	½ Hp	
Pump Outlet:	¼" NPTF	

Accessories

Description	**120 lb.**	**400 lb.**
Follower plate	85492	270982
Drum cover	85474	85475
Vent valve assembly	85660	85661
Strainer	272180	272180

Model 84944

Model 84960

Model 84962

Model 84944

Hydraulic-operated pump with 60 lb. metal reservoir and vent valve.

Model:	**84944**
Nominal Lubricant/ Hydraulic Pressure Ratio:	16:1
Output/Min @ 30 Cycles/Min:	11 cu. in. / 180 cc
Reservoir Capacity:	60 lb. / 27 kg ,1800 cu. in. / 29,500 cc
Hydraulic Inlet/Outlet:	¼" NPTF (M)
Lube Outlet:	¾" NPTF (M)

Important Note:
1. Pumps require a timed electrical signal to operate. Use Model 244270 (not potted) or 249605 (potted) Cycle Timer. See System Controls section for specifications.
2. Included hydraulic solenoids require 24 VDC.

Model 84961

Basic pump only for Model 84944. Includes pump and hydraulic control. Does not include reservoir or vent valve.

Model 84960

Hydraulic pump for use with U.S. standard 120 lb. refinery drum. System components (pump, vent assembly, drum cover and follower plate) must be ordered separately.

Model 84962

Hydraulic pump for custom lubricant container installations. Pump length is sized for U.S. standard 400 lb. refinery drum depth.

Model	Nominal Lubricant/ Hydraulic Pressure Ratio	Output/Min @ 30 Cycles/Min	Lube Outlet	Pump Tube Length	Pump Tube Diameter
84960	16:1	11 in³ 180 cm³	¼" NPTF(F)	-	-
84962				33 15/16" 862 mm	1" 25.4 mm

Important Note:
1. Pumps require a timed electrical signal to operate. Use Model 244270 (not potted) or 249605 (potted) Cycle Timer. See System Controls section for specifications.
2. Included hydraulic solenoids require 24 VDC. Use Vent Assembly Model 84990; Drum Cover Model 84616 and Follower Plate Model 83371. Drum Cover and Follower Plate are for use with Model 84960 only.

Hydraulic Power Supply Requirements

Hydraulic Inlet Pressure psig / bar		Flow Rate @ 30 Cycles/Min. GPM ltrs/min	Fluid Max. Inlet Temperature	Ambient Operating Temperature Range		Filtration Requirement
Min	Max			Min	Max	
300 / 21	3000 / 207	1.0 / 3.8	210°F 99°C	-40°F -40°C	+135°F 57°C	10 Micron

Note:
All pumps have a hydraulic pressure reducing valve rated for 60 psi (4 bar) to 800 psi (55 bar) output. Maximum input is 3000 psi (207 bar).

Model 85418

Controller

Model 85419

Model 84111

Airless Spray High-Pressure System

No air required—three words describe why Lincoln's innovative new Airless Spray System is the only system of its kind on the market. But it takes many more words to list all the benefits the latest in Lincoln's long line of technological advances has to offer. Because no air is required, the Airless Spray System means that mining, concrete, steel and other heavy industries can look forward to dependable, high-pressure lubricant spraying that's low-maintenance and cost-effective.

85418 Airless Spray Valve

Model	Operating Voltage	Solenoid Valve Initial Current	Heater Current
85418	115 VAC	.18 Amps	1.80 Amps

Spray Tips

Model	Descrip.	Std Spray Tip	Std Tip with Swivel	Roto-Clean Tip	Roto-Clean Tip with Swivel*
252790	Retaining Nut	Required	Not Required	Not Required	Not Required
252792	Jet Stabilizer	Optional	Optional	Optional	Optional
85423 **	Std. Spray Tip	Required	Required	Not Required	Not Required
271579	Swivel Assy	Optional	Required	Optional	Required
252831	Body	Not Required	Not Required	Required	Required
85427 **	Roto-Clean Tip	Not Required	Not Required	Required	Required

* Discard tip retaining nut and protective cover, supplied with swivel assembly, when installing the roto-clean tip on a swivel assembly.
** See chart below for spray tip models

Standard Carbide Spray Tips	
Model	Model
85423-5001	85423-11003
85423-6501	85423-11004
85423-6502	85423-650067
85423-8001	85423-800067
85423-8002	85423-950080
85423-9501	85423-1100067
85423-9502	85423-1100080
85423-11001	

Roto-Clean Carbide Spray Tips	
Model	Model
85427-5001	85427-9501
85427-6501	85427-9502
85427-6502	85427-650067
85427-8001	85427-800067
85423-8002	85427-1100067

Pumps

Lincoln offers many pump options for supplying lubricant to the lube system. Air-operated pumps are preferred when possible due to their versatility and wide range of selection. Hydraulic and electric pumps are also available. **The pump must be capable of pumping the lubricant to a minimum of 3500 psi at the airless spray valve.**

Filters

Model	Description
85419	Dual filter panel with operator valve to select one of the two 84111 filters. The other filter is isolated from the system pressure for uninterrupted service and easy element replacement
84111	High-pressure, single in-line filter (recommended) 238 micon (60 MESH)
84004	Single in-line filter 140 micon (100 MESH)

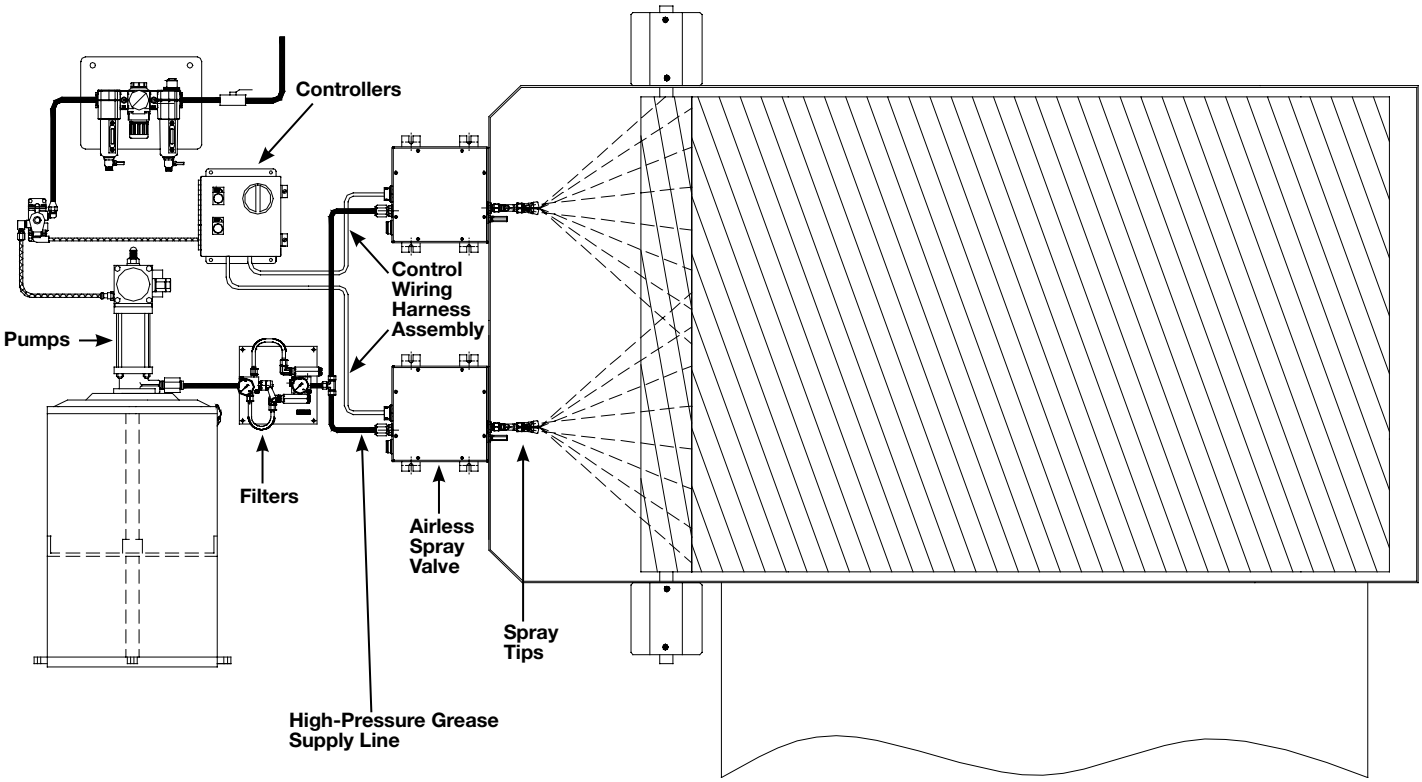

Controllers

Model	Description
254120	For single and dual Airless systems. Operates system by setting the time between lubrication events. Includes manual lube button and system alarm.
256228	For single Airless system with external initiate contacts with manual lube button and system alarm
254815	For dual Airless system with external initiate contacts with manual lube button and system alarm

Control Wiring Harness Assembly

Model	Description
256241	25’ wiring harness connects the controller to each spray valve. One wiring assembly is required for each spray valve.

High Pressure Grease Supply Line

To be furnished by installer

2-Way Fluid Solenoid Valve

Model	Description
272285	For multiple machine/single pump applications. See design guide (form #403172) for details.

High-Pressure, High-Flow Filter Designed Specifically for the Mining, Off-Highway And Industrial Markets

Features and Benefits

- Clogged filter indicator with quick reset
  - Red indicator pin is triggered when the filter element is almost completely clogged
  - If the filter element becomes completely clogged, the grease will safely vent to the atmosphere, preventing contaminated grease from entering the reservoir
- Promotes cost-effective preventative maintenance
- Custom-designed filter element
- Allows for easy and quick cleaning or replacement
- Virtually crush proof element; available in both 250 and 470 micron steel screen sizes
- Durable ductile iron body construction
- 4500 psi (310 bar) pressure rating
- 10 gal./min. (38 liter/min.) maximum flow rate
- Three mounting points for stability

Model	Description
276492	250 micron filter
276492A	470 micron filter
282007	250 micron filter element
282008	470 micron filter element

Reservoir Low-Level Alarm Kits

Low-level kits signal need to fill reservoir

Model	Lubricant Type	Use with Models	Switch Type	Switch Capacity Voltage (Amps)	Feature
83671	Grease	82653, 82655, 83668, 83800, 83834, 83167, 83599, 1833, 1835, 1849, 85434, 85435, 85436, 85437, 85444, 85445	SPDT	125 VAC (15) 250 VAC (15) 480 VAC (15) 24 VDC (2) 125 VDC (½) 250 VDC (¼)	Connect to machine control or visual/ audible alarm circuit.
83696	Oil	82570, 82573, 83667, 283167, 1848, 85430 85431, 85440, 85441			
84629	Grease	84960			Includes follower for U.S. Std. 120 lb. drum.
85490	Grease	84050	None	-	Includes follower, visual indication only.
249608	Grease	84050 new style			

Follower Plates

Recommended when pumping lubricants that do not readily seek their own level.

Model	Use with Pump Model	Container Size
83370	87240, 87228	Standard U.S. 400 lb. refinery drum
83371	1823, 282288, 84960	Standard U.S. 120 lb. refinery drum
92544	1828, 1830	Standard U.S. 120 lb. refinery drum
92597	84050, 84944	Lincoln 60 lb. container
252725	85483	Lincoln 35 lb. unit
85489	85481	Lincoln 60 lb. unit

Model 84004, 84523

In-Line Lubricant Filters

Filters mount in pump outlet before vent valve on reciprocating pump systems. Removes solid contaminants before delivering lubricants to the supply line.

Part No.	Element Size micron	Maximum Pressure	Connections in.	Hex Body Size - in.
84004	140	5000 psig / 340 bar	½ NPTF (M)	¼
84528	570			
* 84239	10	6000 psig / 408 bar	¼ NPTF (F)	1¼

* In-line filter with flouroelastomer seal.

Automatic Filling System Pressure Regulator

Pressurized systems automatically keep up to eight, single stroke oil pump reservoirs full at all times. Use with reservoir seal kits below. Fill pump not included.

Model	Fill Pump Requirements		Fill System Requirements			Lubricant Inlet/Outlet	Vent Outlet
	Max. * psig / bar	Max. Ratio	Max. Length 5⁄8" Tube	Max. Length 3⁄8" Tube	Reservoir Pressure psig / bar		
83372	125 / 8.6	3:1	100'/ 30.5m	55'/16.8m	5 /.34	½" NPT(F)	¼" NPTF(F)

* Indicates maximum lubricant output pressure.

Pressure Kits

Seal reservoirs for automatic filling.

Model	Use with Pump Models
83368	82885
83637	82570, 82573

Manual Filling Pumps

Designed to provide a fast, clean method of filling Centro-Matic pumps with a self-contained reservoir without the risk of lubricant contamination.

Model	Lubricant Type	Lubricant Output	Container Capacity	Hose Length	Lubricant Outlet	Dimensions - in. / mm		
						Height	Width	Container Diameter
81834	Grease NLGI #1 Max	1 oz/stroke 1.9 cu. in. 31 cc	30 lbs. 14.2 L	7' 2.1 m	645006 Hydraulic Coupler	26¾ 679	14 356	9 229
1254	Oil	1 pint/ 7 strokes 473 cc	30 pints 14.2 L	5' 1.5 m	80599 Non-Drip Nozzle			

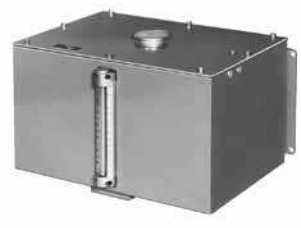

Metal Reservoirs: Rectangular reservoirs for gravity feed oil pumps

Standard ⅜" NPTF outlet furnished for gravity-fed pumps. Features spring loaded cap with strainer, sight gauge and Buna-N O-rings. Model 84376 Sight Gauge Kit available for use with synthetic oil.

Model	Capacity		Lubricant Outlet	Dimensions					
	gal	liter		Height in	Height mm	Width in.	Width mm	Depth in	Depth mm
87417	5	19	⅜" NPTF (F)	10⅛	257	17½	446	12½	318
87418	3	11.3				13½	343	11½	292
87419	1.5	5.7				10½	267	7½	191

Cylindrical Reservoir

Four-gallon steel tank-type reservoir consisting of Model 82700 tank and Model 82612 mounting brackets. Incorporates large filler opening with screw cap.

Model	Tank Number	Bracket Number	Capacity	Lubricant Output	Dimensions - in. / mm	
					Height	Diameter
82621	82700	82612	4 gal. / 15.1L	½' NPT (F)	18 / 457	9 / 229

Ultrasonic Sensor

Ultrasonic High/Low Sensor to make it easier to know when the 60 lb. Centro-Matic® automated lubrication system reservoir is getting low on lubricant and when it's refilled to capacity. Sensor detects the position of the follower plate with ultrasonic waves to report the lubricant level. The sensor is factory programmed for a 60 lb. reservoir. Its two outputs drive external signaling devices or connect with a customer's PLC. Three standard LEDs offer visual indication of the sensor's sensor status and reservoir level.

Model	Description
270782	Ultrasonic sensor
270781	Ultrasonic sensor socket (required)

Ambient Temp. Range	Protection	Power Supply Operating Range	Current less load	Switching Outputs		
				Max. Current	High Level	Low Level
-13°F to 158°F -25°C to 70°C	IP65	20 - 30 VDC	60 mA	200 mA	NO contact (closes when full)	NO contact (opens when low)

Selecting the right controls for your automated lubrication system is one of the last steps in the design process. Several different models may be chosen to control power-operated pumps, depending on the degree of automation and monitoring required. Your Lincoln representative will assist you in specifying the correct model.

Options range from simple timers to fully-automated system controllers and monitors. Basic timers allow you to set the interval between lubrication cycles. More sophisticated monitors control the frequency of lubrication, oversee system performance while showing system status and alarms on a LCD display panel. Monitors may be interfaced with machine control systems to protect your equipment from harm .

You may customize your installation with air and lubricant filters to prolong system life, pressure gauges for monitoring, shut-off valves to ease future maintenance and even automated filling systems to utilize bulk lubricant storage.

All of these possibilities, and more, have made Lincoln Automated Lubrication Systems the choice of industry for over 80 years.

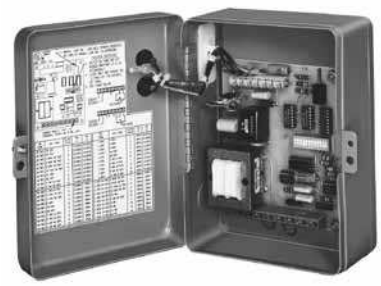

Model 84501 Program Timer—Solid State

Designed to control the lubrication cycle frequency of air-operated single-stroke pumps. Timer turns pump on/off at programmed intervals via a 3-way or 4-way air solenoid valve (not included) installed in the air line to pump.

Off Time (Cycle Time)		On Time (Pumping Time)		Power Requirement	Approvals	Switch Capacity
Min.	Max.	Min.	Max.			
20 Sec.	24 Hrs.	10 Sec.	1 Min. 24 Sec.	120/230 VAC 50/60 Hz	UL, CSA	120 VAC, 5 Amps / 230 VAC, 1.5 Amps

Built-In Program Options		Enclosure				Ambient Operating Temperature Range	
3 Hr. Program Memory	Prelube Function	Rating	Dimensions-in. / mm			Minimum	Maximum
			Height	Width	Depth		
Yes / No	Yes / No	NEMA #1	8¼ / 210	6 13/16 / 173	4 15/16 / 125	0°F /-18°C	130°F/54°C

Note:
Refer to Technical Manual for a full explanation of available program options.

Model 84511 Economy Timer for Single Stroke Pumps

Uses a timing motor, cam and switch to turn pump off and on. NEMA 1 enclosure, UL and CSA listed. Switch capacity 10 amps non-inductive.

Off Time (Cycle Time)		On Time (Pumping Time)		Power Requirement	Approvals	Switch Capacity
Min.	Max.	Min.	Max.			
5 Min.	1 Hr.	30 Sec.	90 Sec.	120 VAC, 60Hz	UL, CSA	10 Amps

Note: Off-time selectable in 5 minute intervals.

Enclosure			
Rating	Dimensions - in. / mm		
	Height	Width	Depth
NEMA 1	5 / 127	3¼ / 82.5	3½ / 89

Model 84015 Timer—12-24V DC

Solid-state microprocessor-based controller for automated lubrication systems on mobile equipment or where AC power is not available. Rugged construction with liquid- and dust-tight enclosure. Includes manual push-button for remote initiation of a lube cycle.

Off Time** (Cycle Time)		Fixed On Time (Pumping Time)	Power Requirement	Switch Capacity
Min.	Max.			
2.5 Min.	80 Min.	75 Sec.	10-30 VDC 25 MA*	5 Amps

* Less load. ** Available selections are 2.5, 5, 10, 20, 40 or 80 minutes.

Enclosure				Ambient Operating Temperature Range	
Rating	Dimensions-in. / mm			Minimum	Maximum
	Height	Width	Depth		
NEMA 12	5¼ / 133	3⅛ / 79	3 / 76	0°F / -18°C	131°F / 55°C

Model 85520 Programmable Controller

Microprocessor-controlled, 120 volt AC unit is fully programmable. Controller has a wider off-time range than timers and a memory switch to turn pre-lube option on or off.

Off Time (Cycle Time)		On Time (Pumping Time)		Power Requirements	Switch Capacity Inductive Load at 120VAC	
Min.	Max.	Min.	Max.		Load Relay	Alarm Relay
30 Sec.	30 Hours	30 Sec.	300 Sec.	120 VAC 50/60 Hz	2 Amps	2 Amps

Enclosure				Ambient Operating Temperature Range	
Rating	Dimensions-in. / mm			Minimum	Maximum
	Height	Width	Depth		
NEMA 12	7½ / 191	4 15/16 / 125	3½ / 89	-13°F / -18°C	150°F / 55°C

Model 85525 Programmable Controller

Same as Model 85520 except includes pressure switch and mounting brackets.

Model 85535 System Controller—24V DC

Same as Model 85520 except is a 24-volt DC - max “on” time = 2 min.

Model 85530 Lubrication System Controller

Controls lubrication frequency and monitors supply line pressure. The LCD displays operating status.

Lube Cycle				Max Count Rate*	Pumping Time Before Alarm	
Timer Mode Off Time		Counter Mode Off Counts			Min.	Max.
Min.	Max.	Min.	Max.			
1 Minute	9,900 Minutes	1 Count	99,000 Counts	30/Sec. @ 50% Duty Cycle	1 Minute	9,900 Minutes

* Minimum duration of count signal is 33 milliseconds.

Power Requirements (less load)		Pump, Solenoid, or Alarm Capacity	Ambient Temperature Range	Enclosure			
Voltage	Current			Rating	Dimensions-in. / mm		
					Height	Width	Depth
120 VAC, 50/60 Hz	85 MA	360 VA	32° to 122°F -0° to +50° C	NEMA 12	9½ 241	8 15/16 227	4⅛ 105
230 VAC, 50/60 HZ	45 MA						
24 VDC	250 MA	5 Amps					

Note: Model 85530 is CSA/NRTL approved.

Model 85209 Panel Mounted Pneumatic Control System

Panel mounted units control lubrication frequency and monitor supply line pressure. Includes Model 85530 Controller (specifications above), Model 69630 Pressure Switch and solenoid-operated air valve.

Lube Cycle				Max Count Rate*	Pumping Time Before Alarm		Connections	
Timer Mode Off Time		Counter Mode Off Counts			Min.	Max.	Air	Lube
Min.	Max.	Min.	Max.					
1 Minute	9,900 Minutes	1 Count	99,000 Counts	30/ Sec.	1 Minute	9,900 Minutes	⅜" NPTF(F)	¾" NPTF(F)

Power Requirements		External Alarm Load Capacity	Ambient Temperature Range	Panel Dimensions in. / mm	
Voltage	Current (less load)			Height	Width
120 VAC, 60 Hz 110 VAC, 50 Hz	47 VA	360 VA	32° to 122°F 0° to +50°C	12 / 305	18¼ / 464

Model 85208

Same as Model 85209 except 220 VAC, 50-60 Hz power.

Model 247333 Pressure Transducer

Pressure Transducer signals actual system pressure. Comes with 72 inch (1.8m) shielded 24-gauge connecting wire. Maximum length of wire between transducer and monitor is 30 ft. (9.1 m).

Range	Accuracy	Proof	Pressure Connection	Ambient Temp.	Input	Voltage Output	Offset	Enclosure
0 to 4000 psi 276 bar	±1%	7500 psig 517 bar	¼" NPT Male Thread	-20° to 180° F -29° to 82° C	10 to 30 VDC	1-6 VDC	1 VDC	NEMA 4X Rating 300 Series Stainless Steel

Electric Solenoid-Operated Air Valves

Model	Type	Electrical Characteristics			Air Inlet/ Outlet	Ambient Temperature Range	Cv Factor	Max. Pressure psi / bar	Conduit Connection
		Power Requirements	Inrush Current Amps	Holding Current Amps					
350244	4-Way	110 VAC, 50 Hz 120 VAC, 60 Hz 8.4 VA	.11	.07	¼ NPT(F)	0° to 120°F -18° to 49°C	1.2	150 / 10.3	½" NPS(F)
350245		220 VAC, 50 Hz 240 VAC, 60 Hz 8.4 VA	.055	.035					
350241	3-Way	110 VAC, 50 Hz 120 VAC, 60 Hz 8.4 VA	.11	.07		0° to 140°F -18° to 60°C	.18		
350242		220 VAC, 50 Hz 240 VAC, 60 Hz 8.4 VA	.055	.035					
350282		12 VDC 6 Watts	N/A	N/A	⅛" NPT(F)				N/A
350283		24 VDC 6 Watts							
68586	2-Way	120V, 60 Hz 12 VA	.2	.1	⅜" NPT(F)		2.4		½" NPT(F)
274398	3-Way	24 VDC 8.5 Watts	N/A	N/A	¼" NPT(F)		.5		N/A
244727		110 VAC, 50 Hz 120 VAC, 60 Hz 11 VA	.12	.09	⅜" NPT(F)	0° to 120°F -18° to 49°C	4.4		½" NPT(F)

Model 249605 Sealed Cycle Timer

Sealed timer attaches to Lincoln 16:1 Hydraulic Pumps and generates timed pulse signal to control pump reciprocating cycle rate.

Power Requirement	Cycle Rate/Minute	
	Min.	Max
24 VDC	6	60

End-of-Line Monitors

Designed to detect system pressure utilizing normally open or normally closed switch.

Model	Switch Rating	Operating Range - psig / bar		Lube Inlet	Dimensions - in / mm		Conduit Connection
		Min.	Max		Height	Width	
83898	125, 250 480 VAC, 15 Amps	1200 / 83	2500 / 172	¼" NPTF(F)	5¾ / 146	2¼ / 57	½" NPSM
83899		700 / 48	1150 / 79				

Model 69630 Pressure Switch

Senses supply line pressure rise/fall to signal system operation to controller or system alarm.

Type	Switch Capacity		Adjustable Range - psig / bar				Connections	
			Decreasing		Increasing			
	AC	DC	Min	Max	Min.	Max.	Lube	Electrical
Single Contact	10 Amps at 125, 250 or 480 VDC	15Amps@6VDC 5Amps@24VDC .03 Amps@ 250 VDC	250 / 17	2775 / 191	280 / 19	3000 / 207	¼" NPT(F)	27/32" hole for ½" conduit connector

Note: Pressure switch has a NEMA 3 housing and UL listed switching elements.

Model No.	Page No.
P603S	28, 29
P653S	25, 26, 27
SL-1	10
SL-11	11
SL-32	6
SL-32HV	7
SL-32 METRIC	16
SL-33	5
SL-33 METRIC	16
SL-41	14
SL-42	12
SL-42 METRIC	16
SL-43	13
SL-44	15
SL-V	8
SL-V XL	9
525-32083-1	43
645-41062-3	28
645-41062-4	28
645-41062-7	28
645-41062-8	28
645-41062-9	28
645-41064-2	28
645-41064-3	28
645-41064-4	28
645-41064-6	28
645-41064-7	28
645-41064-8	28
645-41073-5	28
645-41110-2	28
645-41110-3	28
645-41119-1	28
645-41119-2	28
645-41175-5	28
1254	50
1810	30
1812	35
1823	**34**, 49
1826	38
1827	34
1828	**34**, 49
1829	34
1830	49
1833	**35**, 49
1835	**35**, 49
1848	**38**, 49
1849	**35**, 49
2002	38
2004	34
2008	34
2010	34
3050	44
12511	18

Model No.	Page No.
12511-9	18
12698	18
12698-9	18
14988	17
14991	17
66260	18
66260-9	18
66713	18
67007	18
67007-9	18
67044	18
68421	18
68483	17
68586	55
68587	18
68874	18
69456	18
69630	54, **56**
80072	27
80073	27
80074	27
80075	27
80076	27
80077	27
80078	27
80079	27
80080	27
80081	27
80082	27
80083	27
80084	27
80085	27
80086	27
80087	27
80088	27
80089	27
80090	27
80091	27
80105	27
80106	27
80107	27
80108	27
80109	27
80110	27
80111	27
80112	27
80120	27
80121	27
80122	27
80127	27
80128	27
80129	27
80130	27

Model No.	Page No.
80131	27
80134	27
80135	27
80599	50
81646	17
81675	34, 38
81713	10
81713A	10
81729	44
81770-1	10
81770-2	10
81770-3	10
81770-4	10
81770-5	10
81770-6	10
81834	30, 32, 33, 35, **50**
82272	18
82292	14
82294-1	14
82294-2	14
82294-3	14
82294-4	14
82294-5	14
82295	14
82570	**37**, 50
82573	**37**, 50
82612	51
82621	51
82653	**32**, 49
82655	**32**, 49
82676	37
82700	51
82885	**37**, 50
82886	32
83167	**33**, 49
83272	17
83309-1	5
83309-2	5
83309-3	5
83309-4	5
83309-5	5
83309-6	5
83311-1	12
83311-2	12
83311-3	12
83311-4	12
83311-5	12
83311-6	12
83311-10	12
83311-15	12
83313	12
83314	5
83314-9	5

Model No.	Page No.
83336-1	6
83336HV-1	7
83336-2	6
83336HV-2	7
83336-3	6
83336HV-3	7
83336-4	6
83336HV-4	7
83336HV-5	7
83336HV-6	7
83336HV-7	7
83336HV-8	7
83336HV-9	7
83336HV-10	7
83337	6
83337HV	7
83337-9	6
83338	6
83338HV	7
83447	34
83368	50
83370	49
83371	34, 46, **49**
83372	50
83535	12
83599	**33**, 49
83637	50
83661-2	13
83661-3	13
83661-4	13
83660	13
83661-1	13
83667	**37**, 49
83668	**32**, 49
83671	49
83696	49
83715-1	5
83715-2	5
83715-3	5
83715-4	5
83715-6	5
83715-7	5
83724-1	6
83724-2	6
83724-3	6
83724-4	6
83730	17
83748	15
83749-1	15
83749-2	15
83749-3	15
83749-4	15
83749-5	15
83800	**32**, 49
83817	30
83834	**32**, 49
83898	56
83899	56
83900	5
83900-9	5
83924	18
83924-9	18
84004	**47, 50**
84015	53
84034	34
84048	12
84050	**39**, 49
84110	13
84111	47
84195	17
84200	17
84203	17
84204	18
84239	50
84376	51
84428-1	12
84428-2	12
84428-3	12
84428-4	12
84428-5	12
84428-6	12
84428-10	12
84428-15	12
84429-1	13
84429-2	13
84429-3	13
84429-4	13
84501	32, 37, **52**
84511	52
84528	50
84616	40, 46
84629	49
84776	10
84944	**46**, 49
84960	**46**, 49
84961	46
84962	46
84990	40, 46
85208	54
85209	34, 38, **54**
85215	34
85217	38
85218	34
85220	20
85351-1	16
85351-2	16
85351-3	16
85351-4	16
85351-5	16
85351-6	16
85352-1	16
85352-2	16
85352-3	16
85352-4	16
85352-5	16
85352-6	16
85353-1	16
85353-2	16
85353-3	16
85353-4	16
85391	37
85414	23
85418	47
85419	47
85423	47
85424	23
85425	23
85427	47
85423-5001	47
85423-6501	47
85423-6502	47
85423-8001	47
85423-8002	47
85423-9501	47
85423-9502	47
85423-11001	47
85423-11003	47
85423-11004	47
85423-650067	47
85423-800067	47
85423-950080	47
85423-1100067	47
85423-1100080	47
85427-5001	47
85427-6501	47
85427-6502	47
85427-8001	47
85427-8002	47
85427-9501	47
85427-9502	47
85427-650067	47
85427-800067	47
85427-1100067	47
85429	23
85430	**36**, 49
85431	**36**, 49
85432	36
85433	36
85434	**31**, 49

Model No.	Page No.
85435	**31**, 49
85436	**31**, 49
85437	49
85438	36
85440	**36**, 49
85441	**36**, 49
85442	31
85444	**31**, 49
85445	**31**, 49
85446	24
85460	39
85471	20
85472	20
85473	20
85474	43, 44, 45
85475	43, 44, 45
85479	42
85480	20
85481	20, 49
85482	20
85483	20, 49
85484	20
85487	20
85489	49
85490	49
85492	40, 43, 44, 45
85497	11
85518	20
85520	35, 38, **53**
85525	53
85530	54
85535	53
85552	20
85553	20
85554	20
85566	20
85569	20
85585	20
85587	20
85591	20
85592	20
85598	20
85599	20
85660	44, 45
85661	44, 45
85662	44
85663	44
85664	43
85665	43
85676	20, **40**
85677	20
85678	20, **40**
85706	22
85722	20, **41**
85723	20
85724	20
85725	20, **41**
85726	20, **41**
85727	20, **41**
85728	20, **41, 43**
85729	20, **43**
85730	20, **43**
85731	20, **40**
85732	20, **40**
85733	20, **40**
85734	20, **40**
85735	20
85736	20
85737	20, **42**
85738	20, **42**
85739	20, **42**
85740	20
85741	20
85742	20
85743	20, **44**
85744	20, **44**
85745	20, **45**
85746	20, **45**
85747	20, **42**
85748	20, **42**
85749	20, **42**
85750	20
85751	20, 44
85752	20
85753	20, 44
85754	20, **42**
85762	22
85763	22
85770-1	8
85770-2	8
85770-3	8
85770-4	8
85770-5	8
85770-6	8
85771	8
85772	8
85780-1	9
85780-2	9
85780-3	9
85780-4	9
85780-5	9
85780-6	9
85781	9
85782	9
85785-1	9
85785-2	9
85785-3	9
85785-4	9
85785-5	9
85785-6	9
85785-7	9
85785-8	9
85785-9	9
85785-10	9
85850	20
85851	20
86258	20
87228	49
87240	49
87417	51
87418	51
87419	51
90537	17
92544	49
92597	39, **49**
94553H	44
102781	17
201849	35
239351	10
239352	10
239353	10
239354	10
239355	10
244270	46
244727	55
247333	55
249281	**17**, 18
249282	**17**, 18
249605	46, **55**
249608	49
252725	49
252790	47
252792	47
252831	47
254120	48
254815	48
256228	48
256241	48
270781	51
270782	51
270982	40, 43, 44, 45
271579	47
271605	40
271606	40
271924	23
271925	23
271926	23
271927	23
272180	43, 44, 45

Model No.	Page No.
272285	48
273088	17
273089	17
274312	22
274398	55
274524	22
274824	17
274872	22, 44
274873	20, 44
274874	20
274878	44
274886	44
274887	44
274888	44
274899	43
274934	44
275878	44
276041	20, 44
276325	43
276358	44
276359	44
276360	20
276366	44
276492	49
276492A	49
276764	25
276765	25
276849	22
276903	43
276919	43
277560	20
277654	22
277659	22
277703	22
278092	22
278094	22
278095	22
278096	22
278097	22
280414	22
280441	22
280442	22
280450	22
280455	22
282007	49
282008	49
282288	**34**, 49
283005	22
283167	**38**, 49
350241	55
350242	55
350244	32, 37, **55**
350245	55
350282	55
350283	55
645006	30, 32, 33, 35, 50

A complete line of lubrication solutions and industrial pumping products

Automatic lubrication
Our automatic systems dispense measured amounts of lubricant at predetermined intervals. Systems include Helios® and Duo-Matic™ two-line systems, and Centro-Matic®, Modular Lube®, Quicklub® and ORSCO precision oil lubrication. With our BearingSaver® program, we find the best automatic solution for you from our wide range of systems for grease, fluid grease and oil.

General lubrication
Sometimes a simple approach is the best solution. Our wide range of products includes smaller, self-contained automatic lubricators and general lubrication equipment.

Industrial pumping
Lincoln has developed specialized pumps and pumping stations to handle the difficult job of transferring thick fluids. From the industry-best PileDriver III® and PowerMaster III® pumps and air motors to specialty pumps, controls and mounting accessories, Lincoln is the preferred pumping system for many tough applications.

® SKF is a registered trademark of the SKF Group.

® Lincoln, Centro-Matic and FlowMaster are registered trademarks of Lincoln Industrial Corp.

© Deutsch is a copyright of the Deutsch Group.

© SKF Group 2013
The contents of this publication are the copyright of the publisher and may not be reproduced (even extracts) unless prior written permission is granted. Every care has been taken to ensure the accuracy of the information contained in this publication but no liability can be accepted for any loss or damage whether direct, indirect or consequential arising out of the use of the information contained herein.

December 2013 · **FORM 442832**

skf.com